Facebook – SixPack-40

128x40GE Modular Switch

Authors:

Zhiping Yao, Network Hardware Engineer, Facebook

Jimmy Leung, Network Mechanic Engineer, Facebook

Xu Wang, Hardware Engineer, Facebook

1. Revision History

Date	Name	Description
01/23/2016	Zhiping Yao	initial OCP revision for SixPack-40
01/31/2016	Zhiping Yao	V0.2
02/02/2016	Jimmy Leung	Add 2D/3D rendering diagram
02/12/2016	Xu Wang	Update FAB block diagram
02/13/2016	Zhiping Yao	Clean up diagram of FAB, OOB, v0.6
03/09/2016	Zhiping Yao	V0.7 update license to OCPHL-R for now

2. Scope

This document provides the technical specifications for facebook's 128x40G Modular Switch (aka SixPack, or SixPack-40).

3. Contents

1. Revision History 2
2. Scope 4
3. Contents 4
4. Introduction 6
   - 4.1. Scope 6
   - 4.2. System Description 6
   - 4.3. Common terms 8
   - 4.4. Chassis 8
5. System Components 11
   - 5.1. Line Card 13
   - 5.2. Fabric Module 14
   - 5.3. Backplane 17
6. System Architecture 21
   - 6.1. Data Plane and Fabric Topology 21
   - 6.2. Control Plane 23
   - 6.3. Chassis Power 26
7. SixPack-40 Mechanical 28
   - 7.1. Dimension Requirement 28
   - 7.2. Temperature Sensors 30
   - 7.3. FRU and Module Numbering 31
   - 7.4. Slot ID 31
8. Host CPU and BMC Functional features 32
   - 8.1. BIOS Feature List 32
   - 8.2. BMC Feature Support 33
9. Transceivers and cables 33
   - 9.1. 40G optics 33
   - 9.2. 40G Cables 33

10. Environmental Requirements and Reliability 34
10.1. Environmental Requirements 34
10.2. Vibration and Shock 34
10.3. Mean Time Between Failures (MTBF) Requirements 34
10.4. Regulations 34
11. Labels and Markings 35
11.1. PCBA Labels and Markings 35
11.2. Chassis Labels and Markings 36
12. Software and Firmware Specification 36
13. Appendix 36
13.1. Appendix: Commonly Used Acronyms 36

4. Introduction

4.1. Scope

Sixpack-40 platform is facebook's 128x40G modular switch system based on Broadcom Trident-2 Switch ASIC. It is intended to be used as aggregation switch in facebook's data-center switch fabric network.

The purpose of this document is to provide a high level description of the SixPack platform, its software accessible interfaces, and required software actions to properly manage the hardware at the system level. Refer to the individual module functional specifications for additional detail.

4.2. System Description

SixPack-40 is Facebook's 40G datacenter modular switching platform. The main features supported are:

- 19-in, 7RU chassis
  - Disaggregated architecture. Totally 12 switch elements.
  - Each Switch element(SWE) consists of the following 3 devices:
    - one Broadcom Trident-2 Switch ASIC
    - one Panther+ micro-server
    - one BMC
  - 8 Line cards, each Line card has one Switch Element (SWE).
  - 2 fabric cards, each fabric card has two Switch Element (SWE).
  - 32x40G
  - PCIe Gen2 x2 Lane control interface
- Control plane
  - intel based CPU, it is 1 to 1 mapping to switch ASIC
  - OCP Panther+ CPU module
- Data plane Switching ASIC
  - Broadcom: BCM56850 a.k.a Trident-2 Switch ASIC
- Network interface
  - 32 QSFP+ interface
  - Each QSFP+ port can be configured into 1x40G mode, or 4x10G mode.
  - Trident-2 support 96 10G MAC, so not all the QSFP+ ports can be broken down to 4x10G mode, maximal 24 QSFP+ ports can be configured as 4x10G mode.
- Line Card Front panel management and debug interface
  - Facebook 14-pin debug connector
- Fabric Card Front panel management and debug interface
  - 10/100/1000 RJ45 GBE OOB port
  - RJ45 console port

    - Type-A USB2 port
    - Facebook 14-pin debug connector
- Fan tray
    - Sixpack-40 use two 40mmx40mmx56mm CR fan in one removable fan-tray
    - One fantray per SWE on rear panel
        - Each Line Card has one fan-tray
        - Each Fabric Card has two fan-tray
    - Hot-swap design.
- Power Plane
    - 2+2 PSU redundant
    - 12V output
    - PDB board for 4 PSU power circuit

4.3. Common terms

The following terms are used in Sixpack-40 project:

- 10GE – 10 Gigabit Ethernet
- 40GE – 40 Gigabit Ethernet
- Trident-2 – Broadcom BCM56850 1.28T TOR switch ASIC, a.k.a T2
- LC - Line Card
- FAB – Fabric Module
- BP – Back-Plane
- Panther+ – OCP Micro-server CPU Module
- PCIe – PCI express
- PDB – Power Distribution Board
- PSU – Power Supply Unit. Converts 48V DC or AC line voltage to system 12V

4.4. Chassis

SixPack-40 chassis physical dimension is below:.

- 7RU (H) x 17.22”(W) x 26.0”” (D)

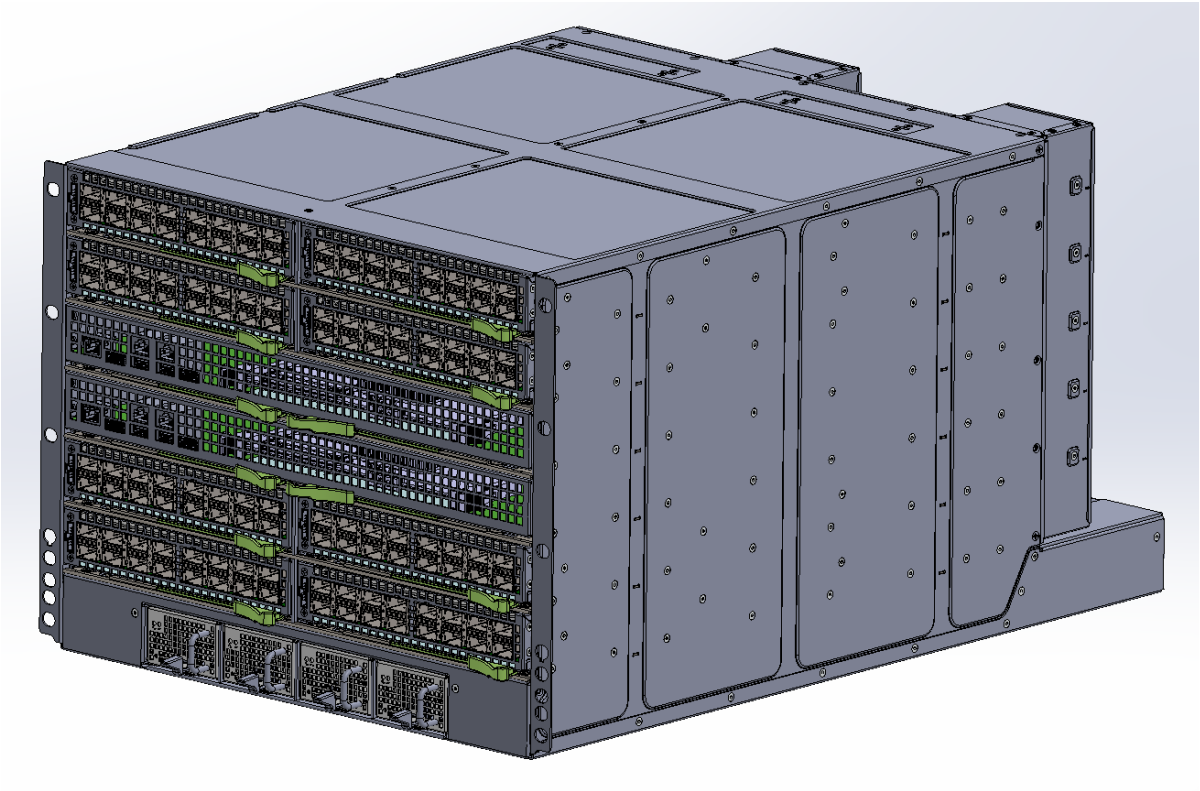

Figure 1: SixPack-40 Chassis front ISO View

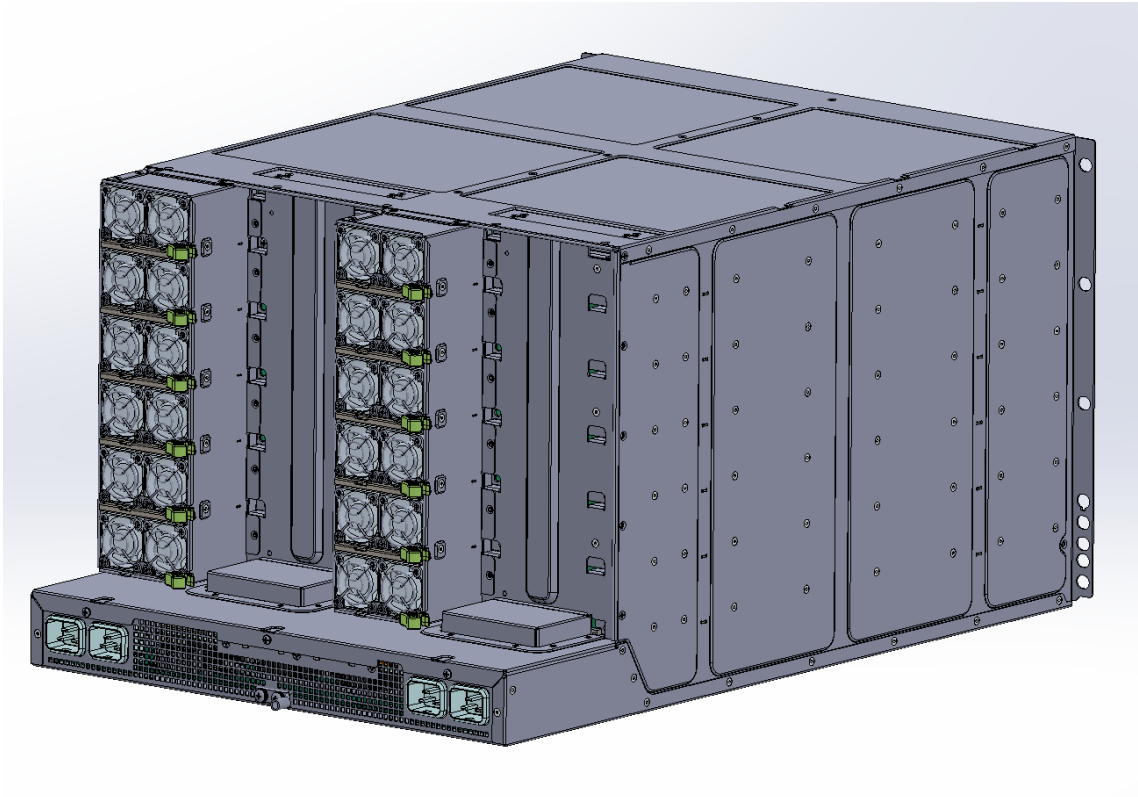

Figure 2: SixPack-40 Rear ISO View

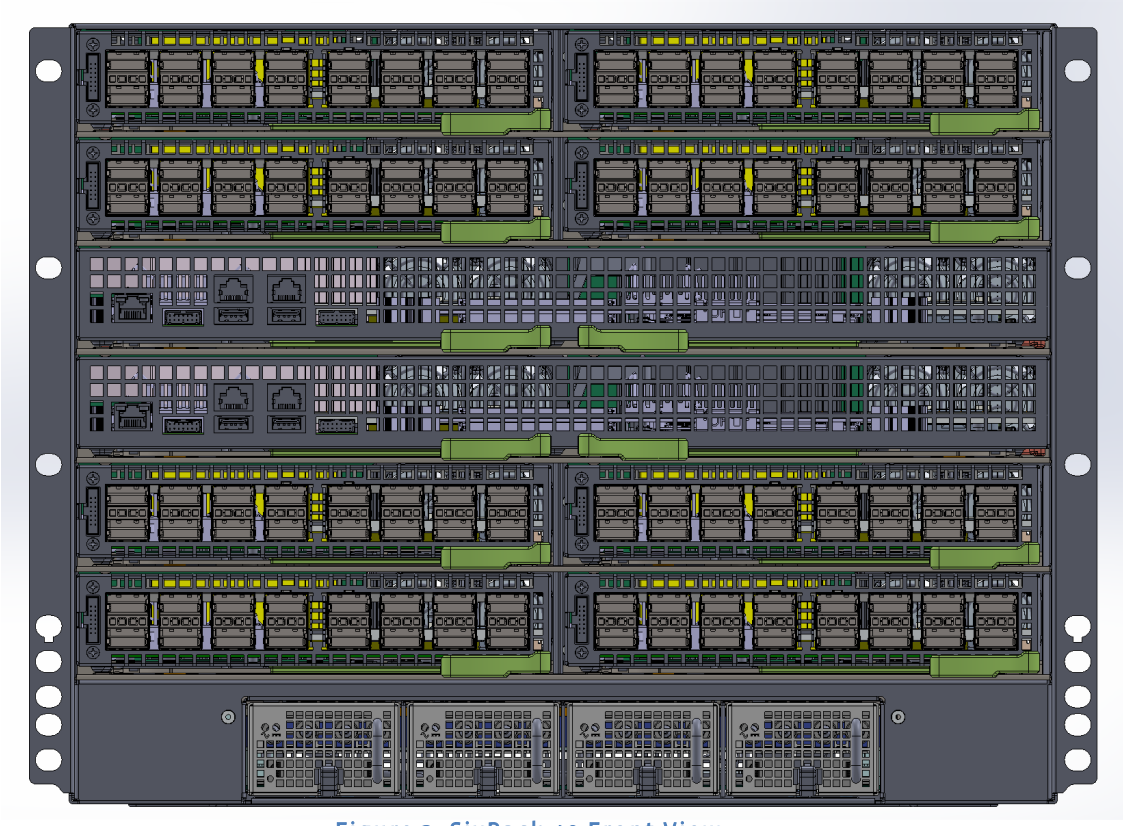

Figure 3: SixPack-40 Front View

Figure 4: SixPack-40 Rear View With Fantray

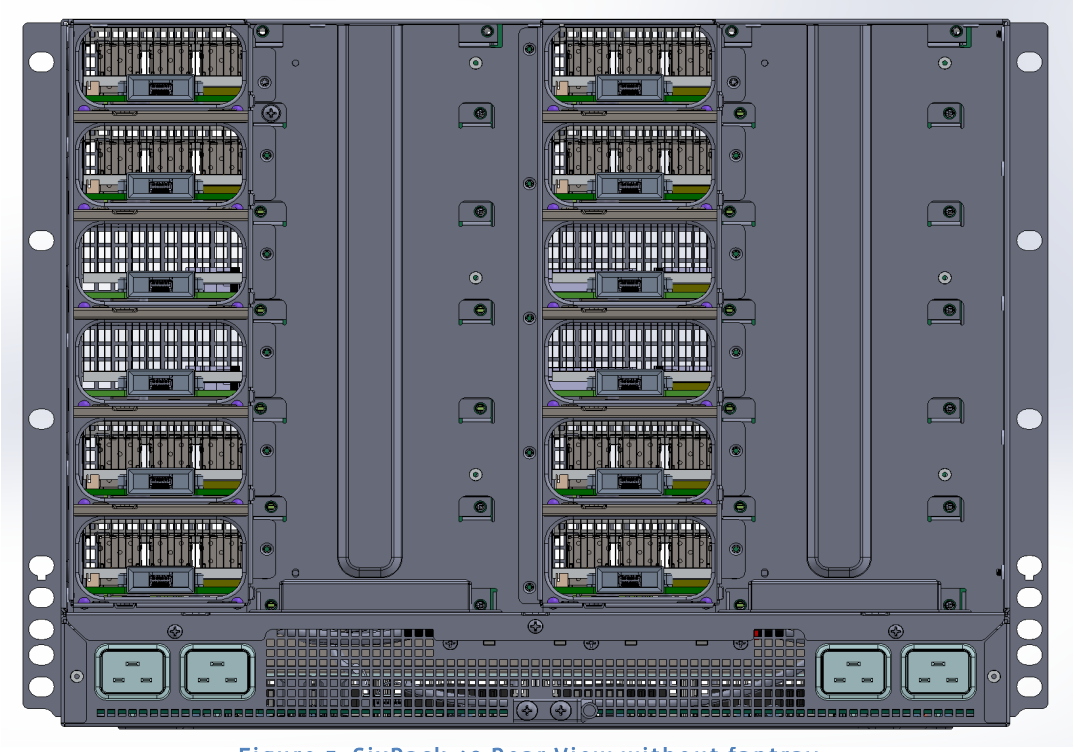

Figure 5: SixPack-40 Rear View without fantray

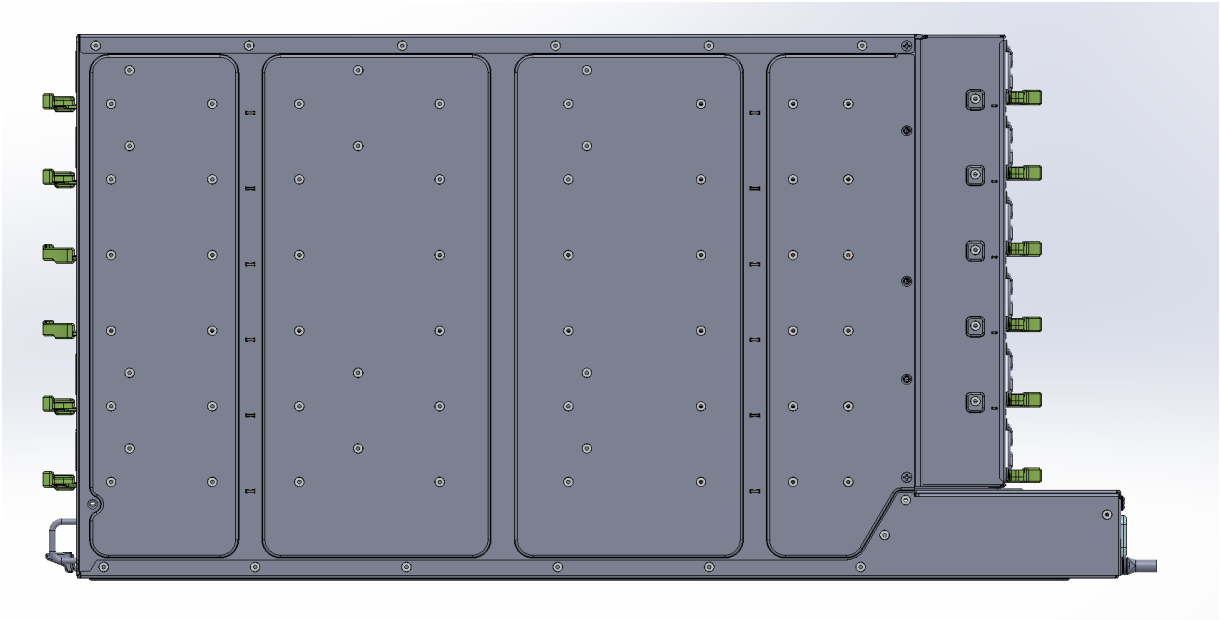

Figure 6: SixPack-40 Side View

5. System Components

Sixpack-40 chassis consists of the following components:

- Line Cards (LC)
- Fabric Card(FAB)
- Backplane(BP)
- Power Bus Bar(PBAR)
- Fan Tray(FAN)
- Power Supply Unit(PSU)
- Power Distribution Board(PDB)

The line cards (LC), Fabric Card (FAB), and power supply (PSU) plug into the front side of the chassis. The fan FRU are accessed from the rear side of the chassis.

FRU Type	Name	Quantity
Line Card	LC	8
Fabric Card	FAB	2
FAN TRAY	FAN	12
PSU	PSU	4

Table 1: FRU Type

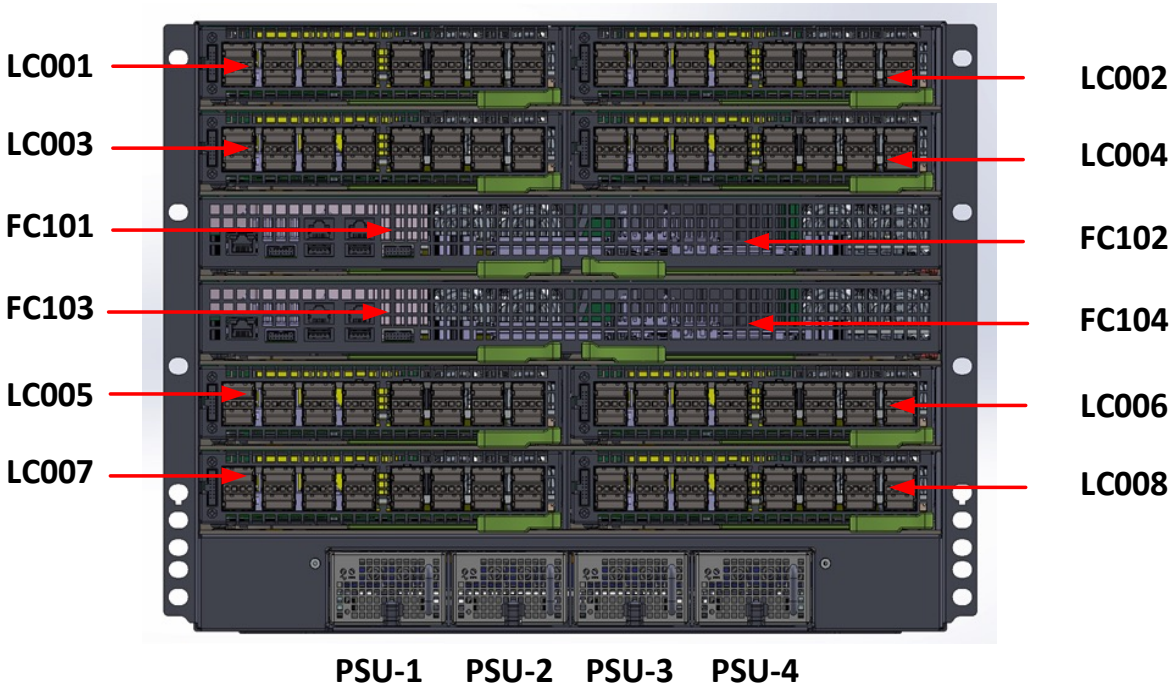

Figure 7: SixPack front View with FRU numbering

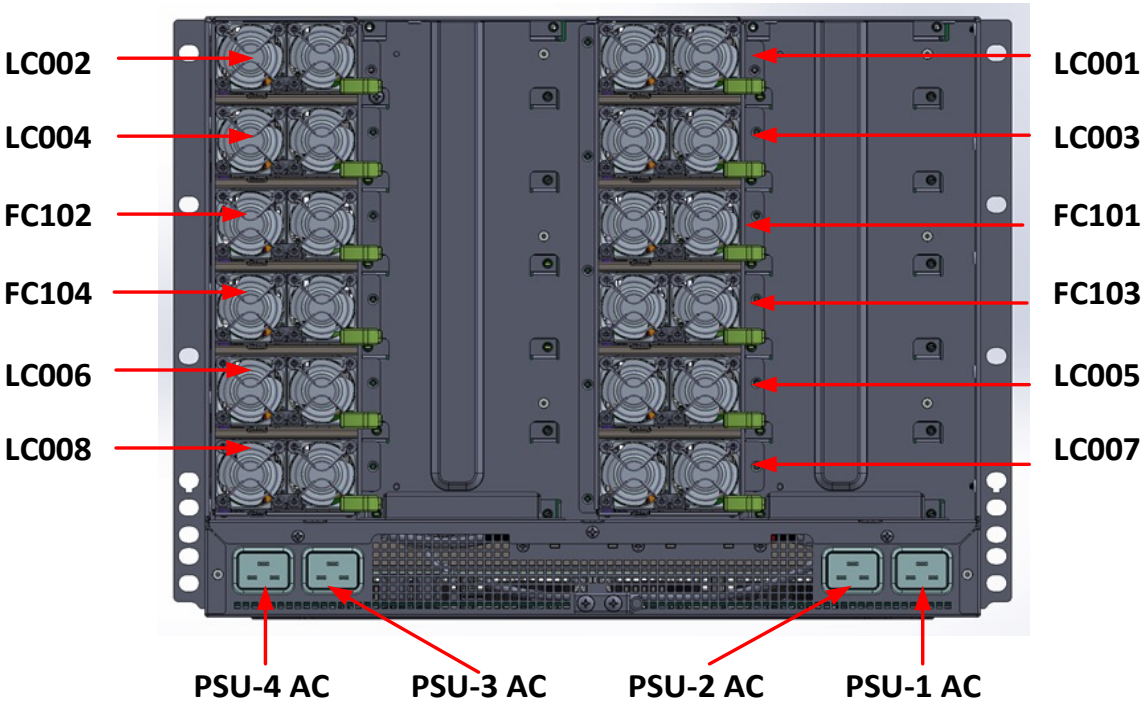

Figure 8: SixPack Rear View with FRU number

5.1. Line Card

The line cards (LC) provide network interface connectivity for Sixpack-40. 16 port of 40G QSFP+ ports are supported by each line card, and totally 8 line card in sixpack-40 chassis. Each line card has the following components:

- One SWE(Switch Element)
  - One Trident-2 Switch ASIC
  - One Panther+ Micro-server
  - One BMC is used for Board Management.
- 16 x40G QSFP+ ports on front panel
- 16 x40G interface(16x4x10G SERDES) to two Fabric Cards
- A five port SGMII GBE Switch is used for OOB switch to connect Panther+ micro-server, BMC Ethernet interface, midplane SGMII interface to switch fabric
- One hot pluggable fan-tray
- Power is provided by backplane

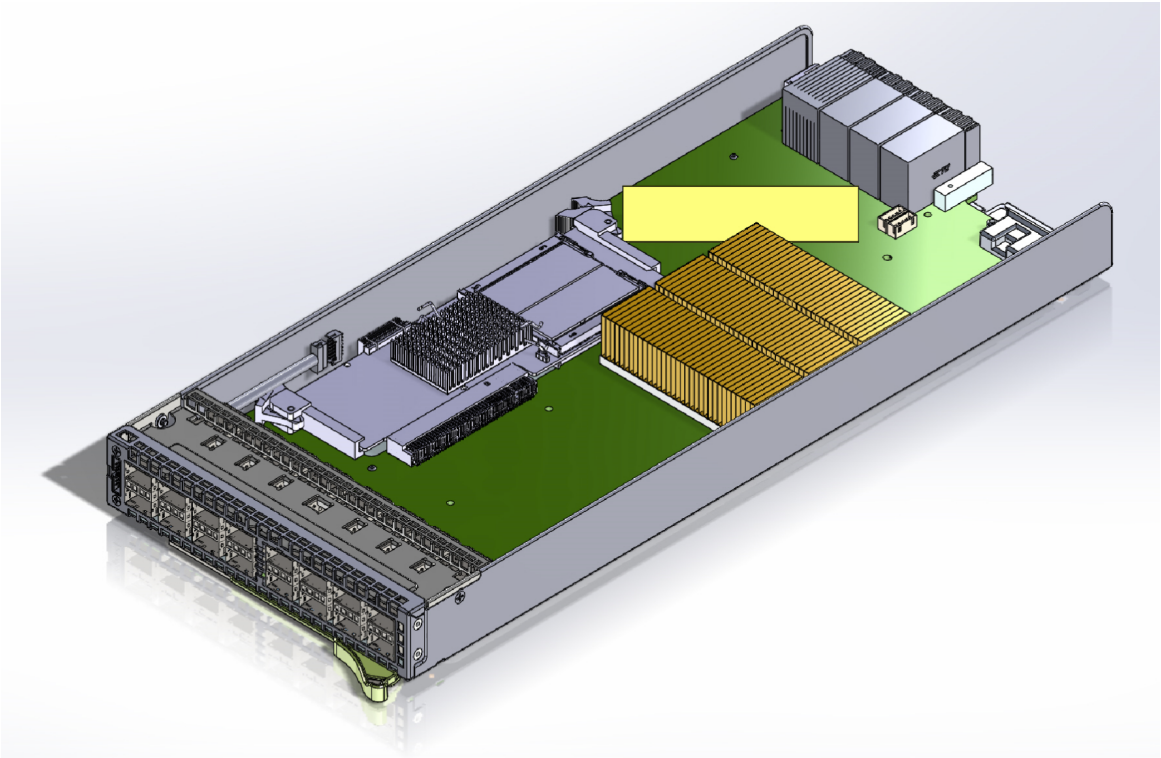

Figure 9: Line Card ISO view

The following diagram shows the detail functional block diagram of line card(LC).

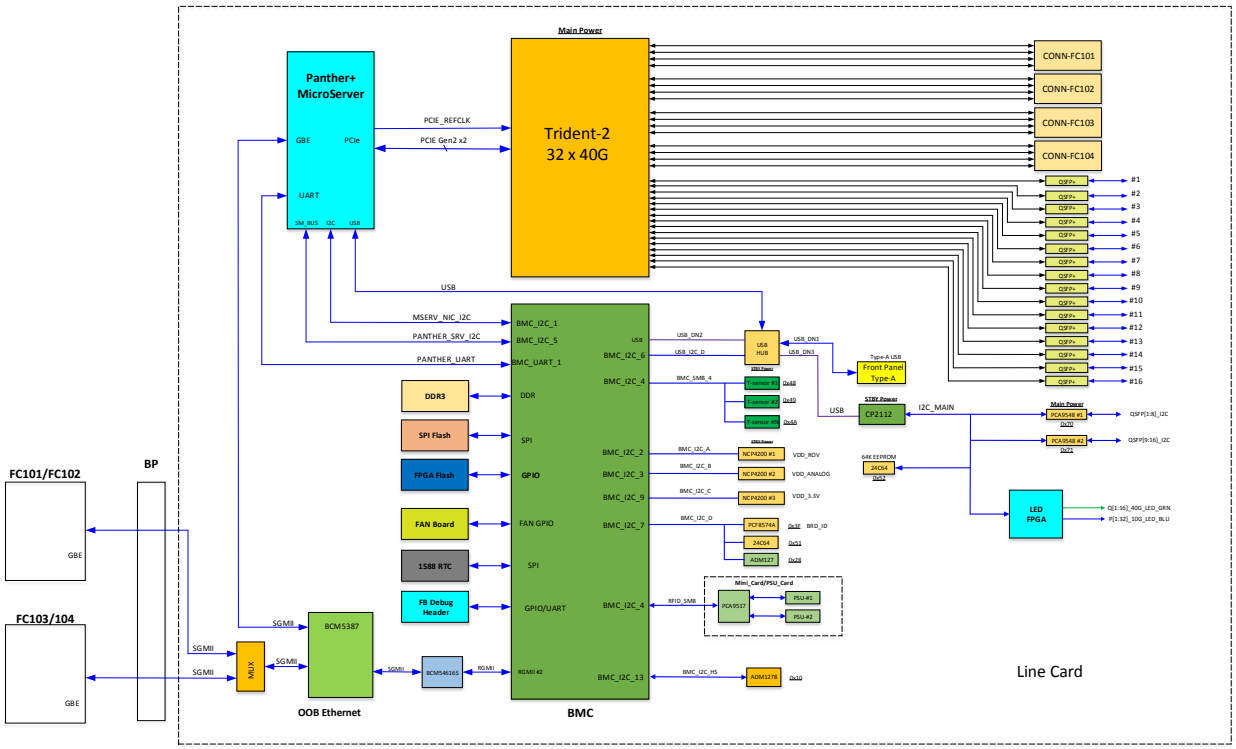

Figure 10: Line Card Functional Block

5.2. Fabric Module

The Fabric card (FAB) provide fabric connectivity to all line cards inside SixPack. There are two Fabric Cards altogether in the system.

Each fabric card consists of the following components:

- Two Switch Elements(SWE)
- Each SWE has
  - Trident-2 Switch ASIC
  - Board Management Controller(BMC)
  - Panther+ Microserver
- High-speed connectors connect to backplane
- A five port SGMII GBE Switch is used for fabric card OOB switch purpose
- A 16 port SGMII switch is used for system SWE OOB connection
- Two fantray, each fan-tray is individually controlled by the BMC of the SWE

The following picture is the iso view of sixpack-40 fabric card.

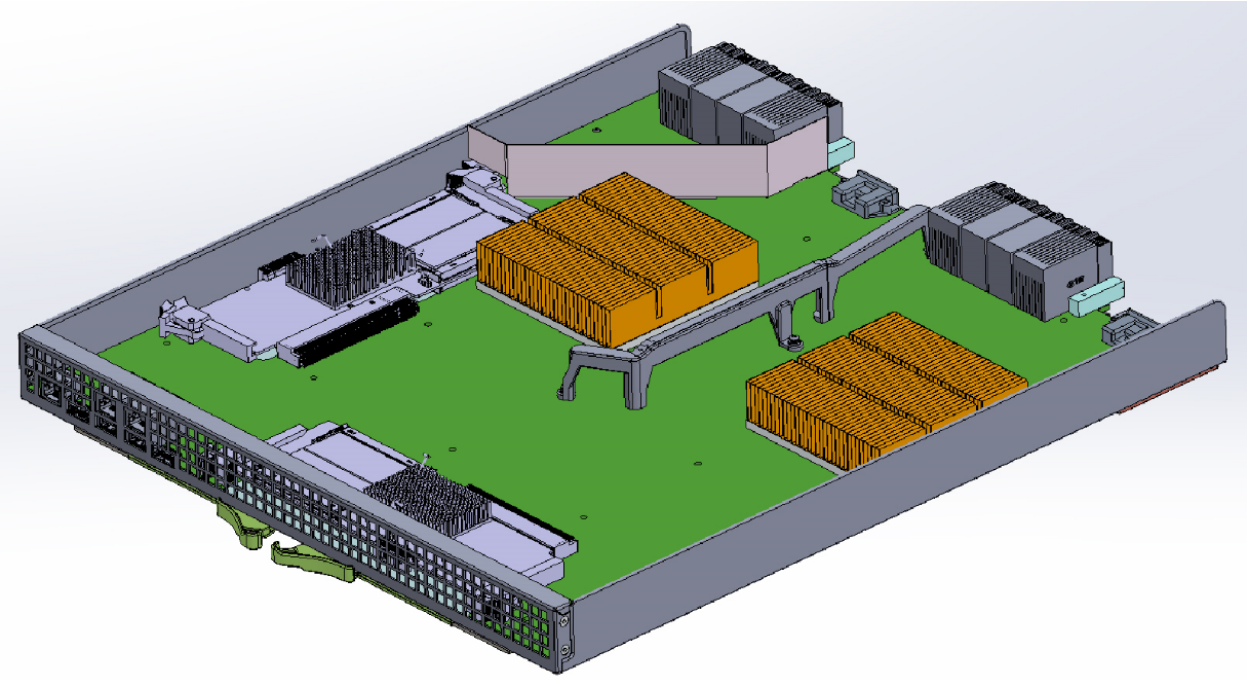

Figure 11: Fabric Card ISO View

The following block diagram shows the function blocks of Fabric Card.

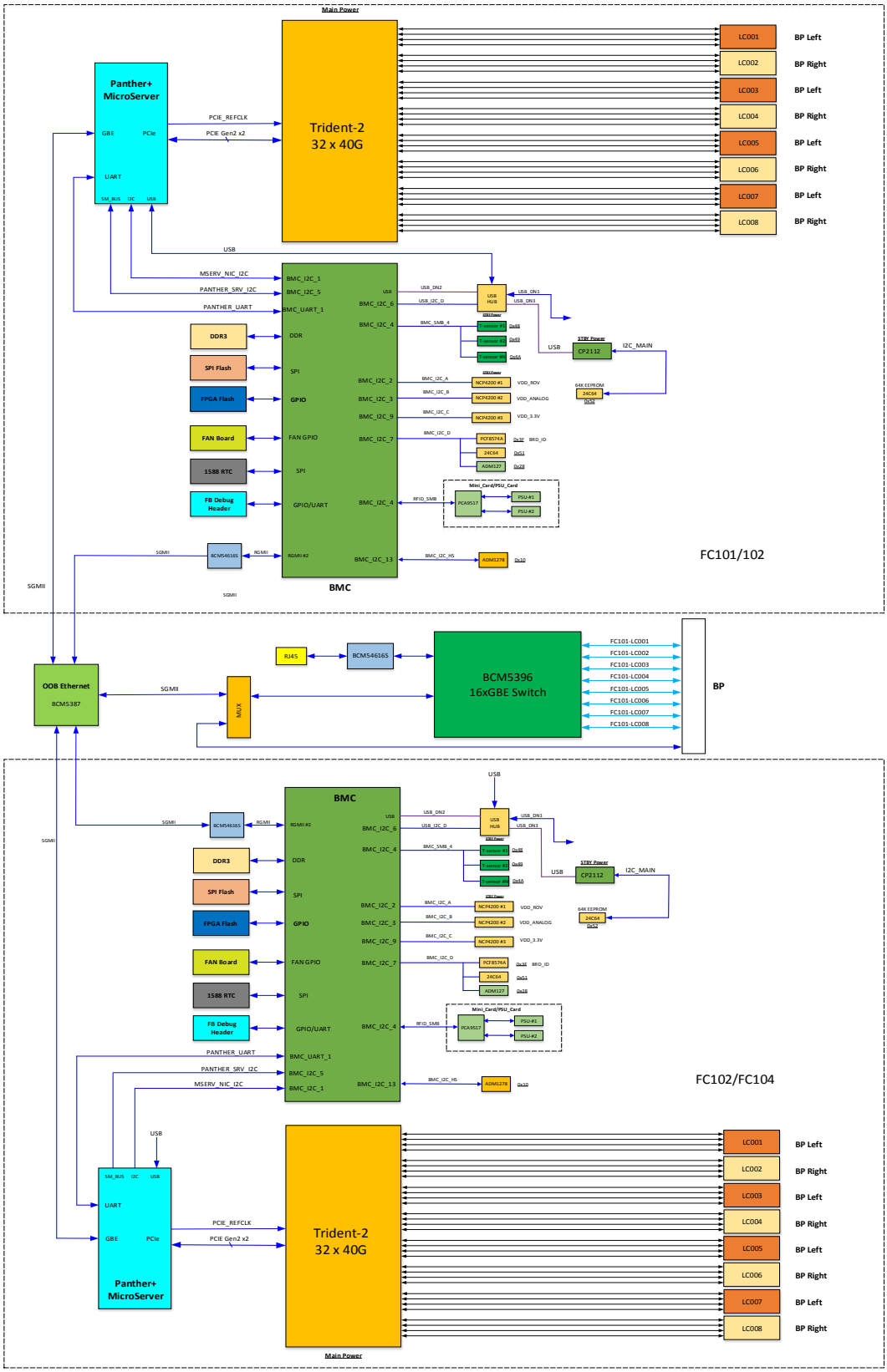

Figure 12: Fabric Card Functional Block Diagram

5.3. Backplane

Sixpack-40 system has two identical backplanes. Backplane connect line card to fabric card in core-edge architecture.

Each Backplane support the following features:

- Support Four line cards, each line card has 64x10G serdes to midplane
- Support two fabric cards, each fabric card has 128x10G serdes
- Power cable to power bus bar
- PDB cable to PDB board

The following diagrams show the two backplanes in the chassis viewed from both front and rear.

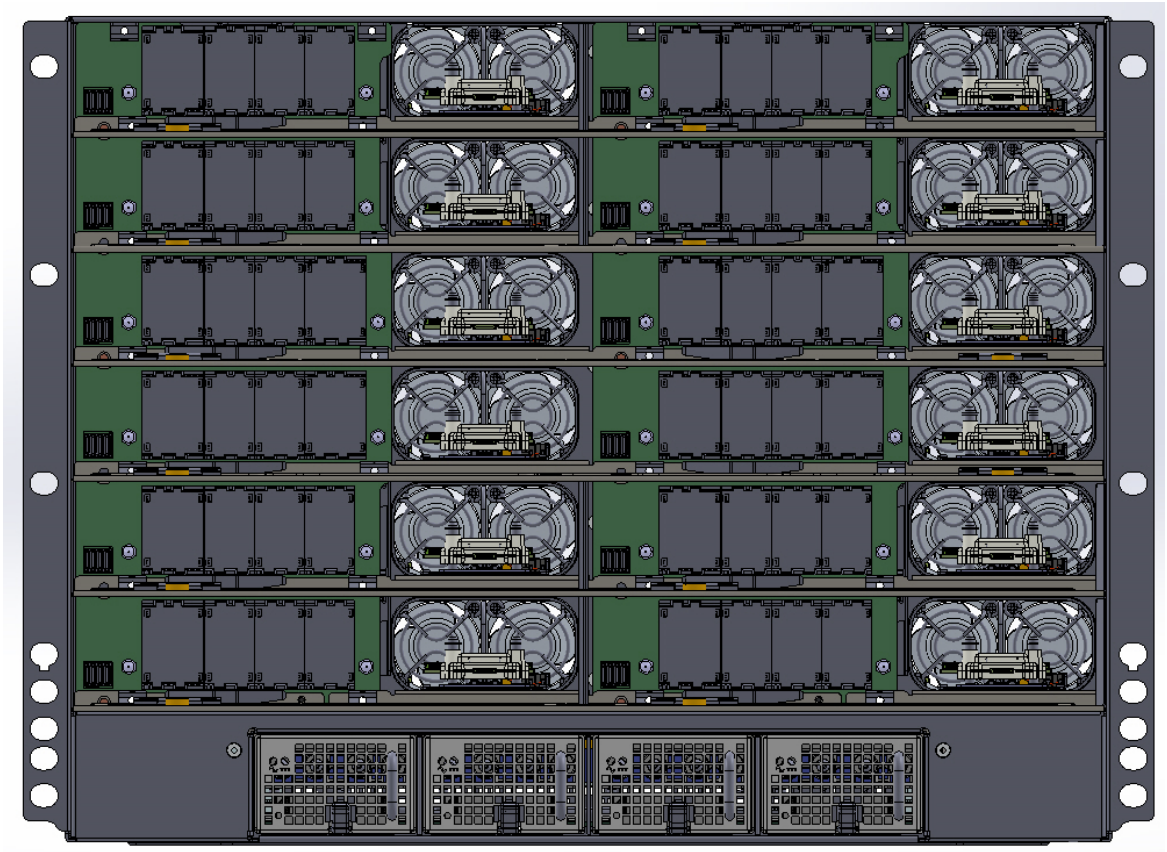

Figure 13: SixPack-40 front view of two backplanes in chassis

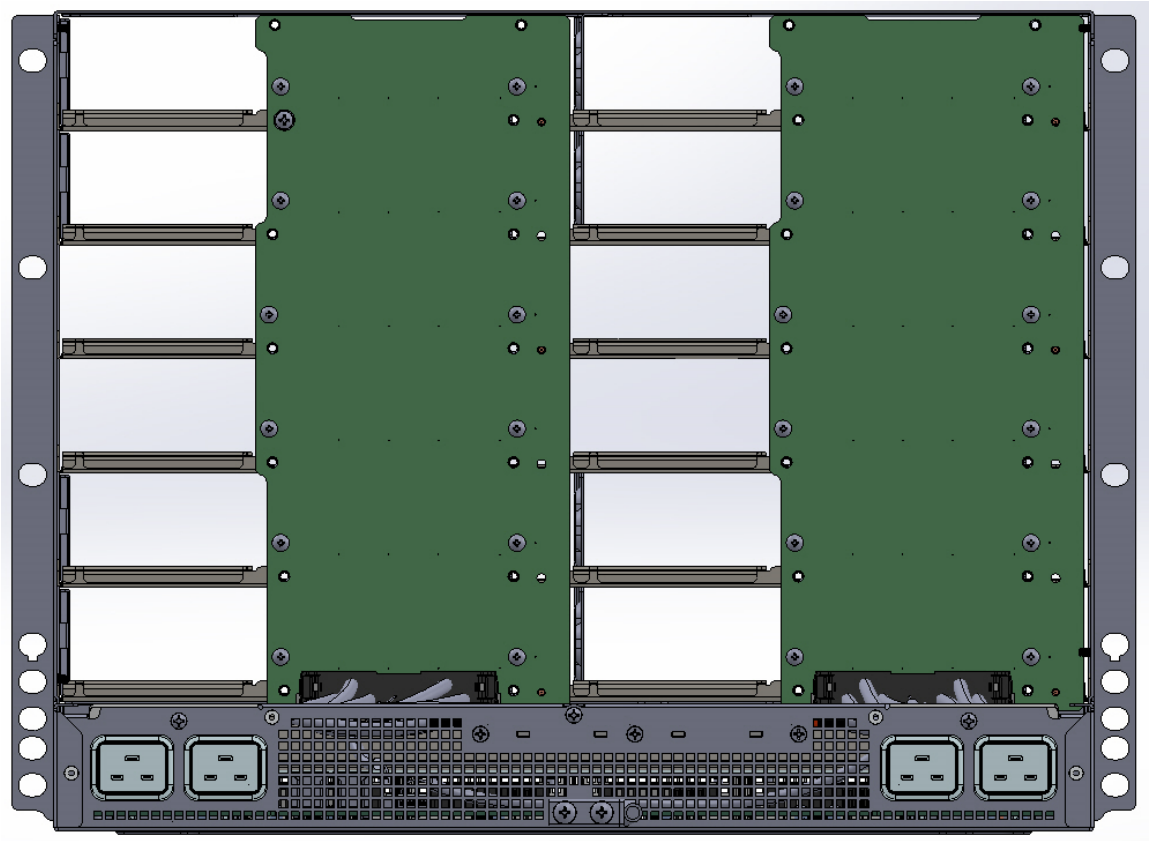

Figure 14: SixPack-40 Rear view of two backplanes in chassis

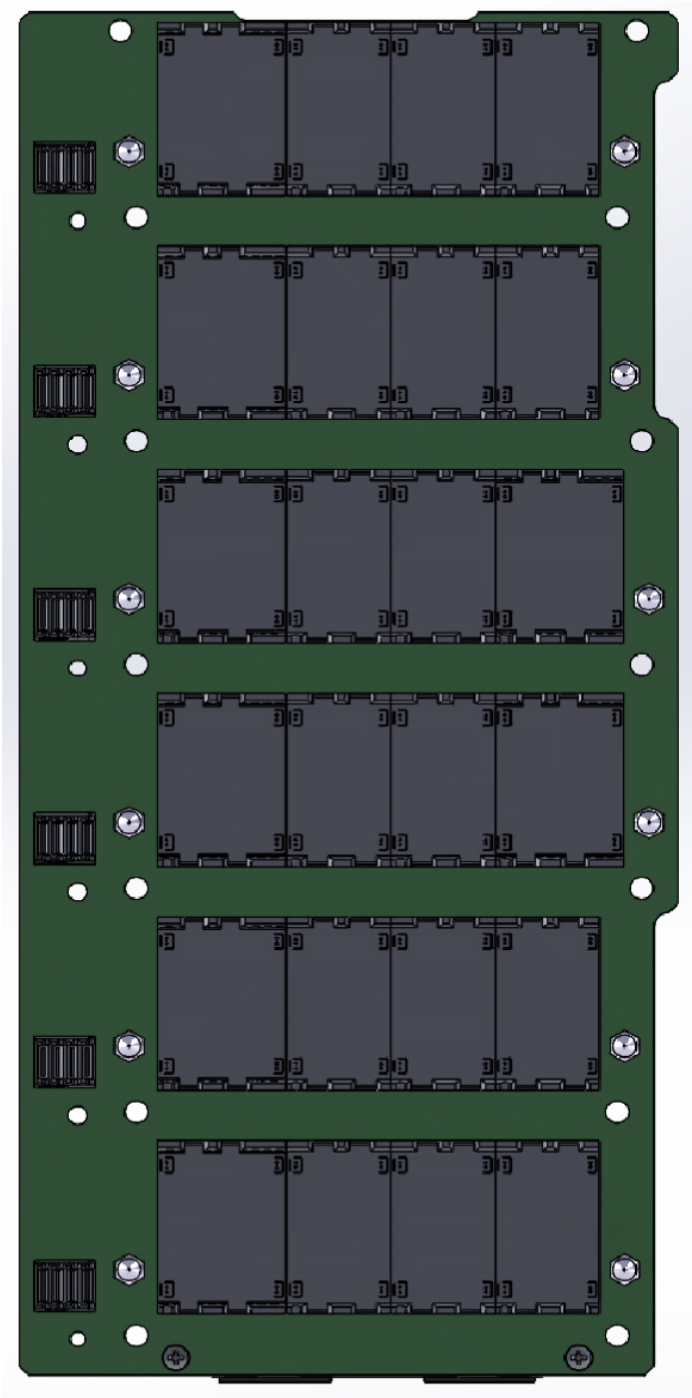

Figure 15: SixPack Backplane front view

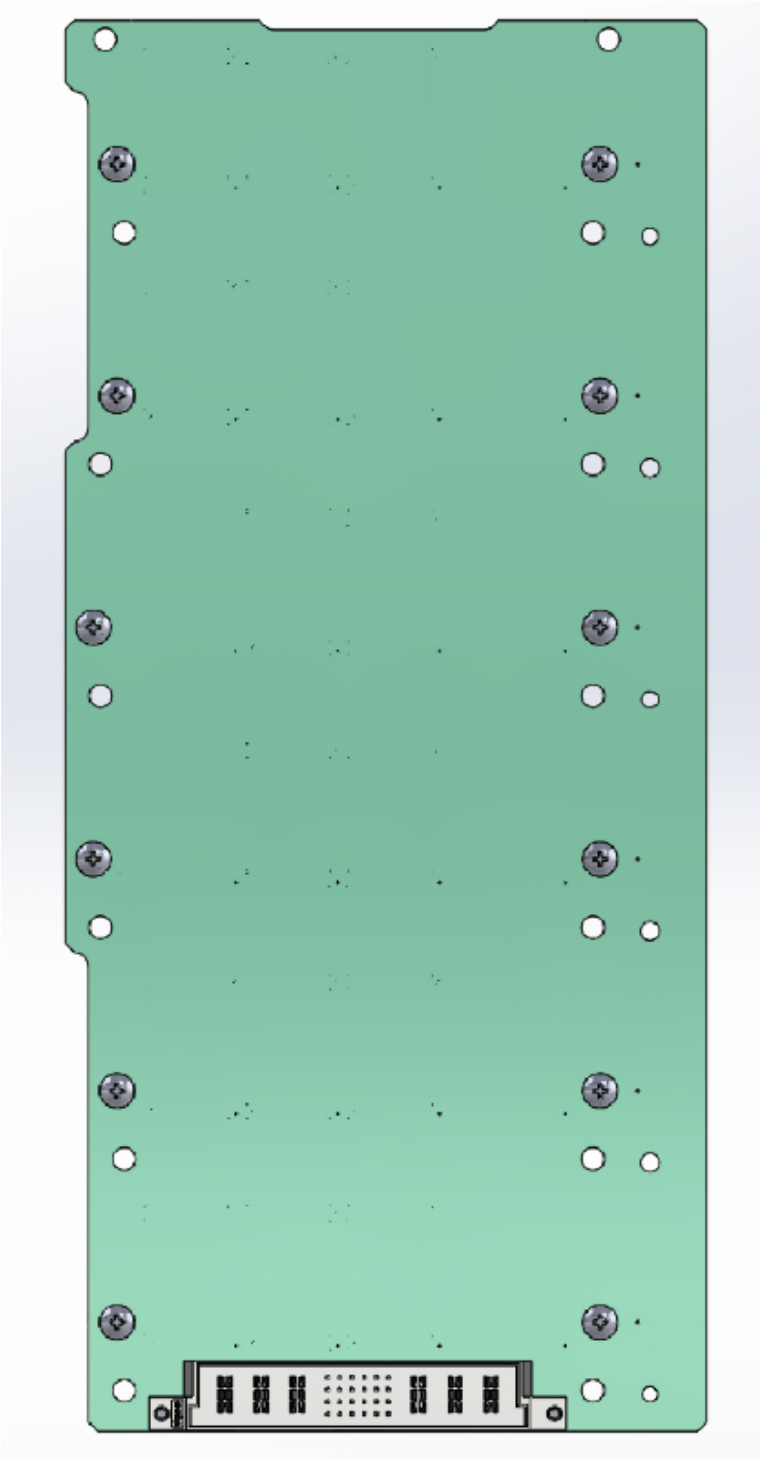

Figure 16: SixPack Backplane Rear View

6. System Architecture

6.1. Data Plane and Fabric Topology

Sixpack-40 uses fat-tree topology for its fabric. The switch ASIC is 32 x 40G port Trident-2 from Broadcom, totally 12 switch ASICs are used in sixpack-40 chassis. There are 8 line cards, and 2 fabric cards in sixpack-40 system. Each line card has one switch ASIC. And each fabric card has two switch ASIC.

Sixpack-40 uses the Facebook unique switch elements to form the fabric. Each switch element has one BMC, one Panther+ CPU module and one switch ASIC. This unique switch element architecture makes our data center network disaggregated, easily managed like a server and easy to scale.

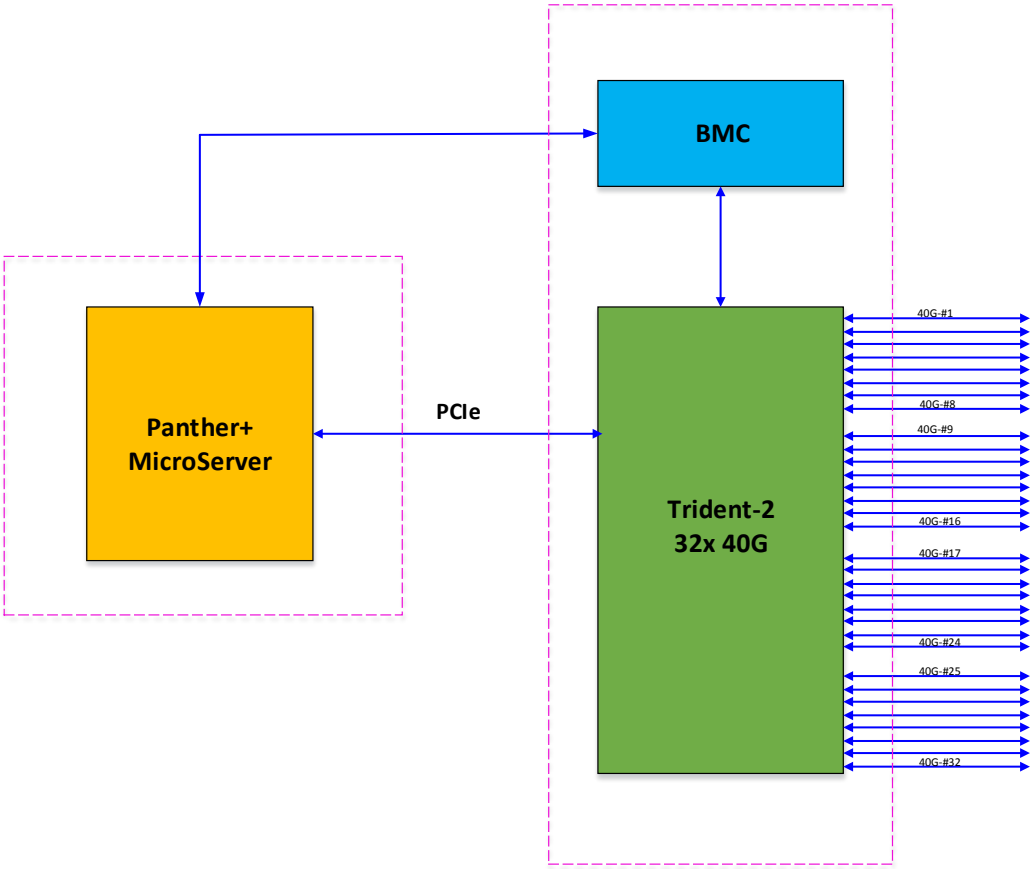

Figure 17: Switch Element

Sixpack-40 fabric architecture is shown below:

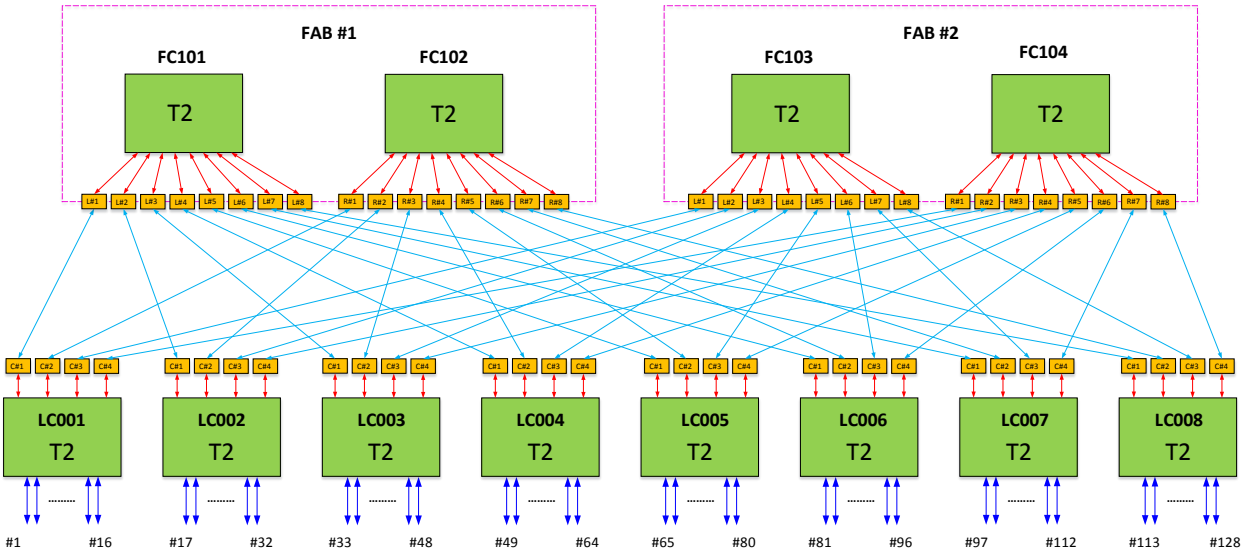

Figure 18: SixPack-40 Data-plane topology

The following table lists the key attributes of Sixpack system.

Attributes	Qty	Notes
Line Cards	8	8 Line card, each line card has one SWE(Switch Element), including one Trident-2 ASIC, one Panther+ MicroServer, and one BMC
Total number of Switch Elements	12	8 LC with 1 Trident-2 at each LC, 2 fabric card with 2 Trident-2 at each FAB
SERDES Links/SWE	128	128x10G serdes, or 32x40G
Fabric Card	2	2 FAB, each FAB has two SWE
Total number of Serdes Link per LC to FAB	64	64x10G serdes links to two FAB, each FAB has 32 links from one LC
Total number of Serdes Link per FAB	256	256x10G serdes links to eight LC, each LC has 32 links
Total # of Links in chassis	512	512x10G links between 8 LC and 2 FAB
Link Speed	10G	Serdes speed is 10Gbps
Total number of QSFP+ ports	128	128 QSFP+ 40G ports, each LC has 16 QSFP+ 40G ports

Table 2: SixPack-40 System Parameters

6.2. Control Plane

SixPack uses disaggregated architecture, each SWE(Switch Element) has one pluggable (not in-line FRU) integrated Micro Sever. The Micro Server is the OCP released Micro Server (latest version when writing this document is 0.7). For a full specification of the Micro Server please refer to the Open Compute site under:

Micro Server card version 0.7
http://www.opencompute.org/wiki/Motherboard/SpecsAndDesigns - Micro-server

Note: Refer to the cards full design specification for the specific connectivity of the Micro Server to the rest of the system.

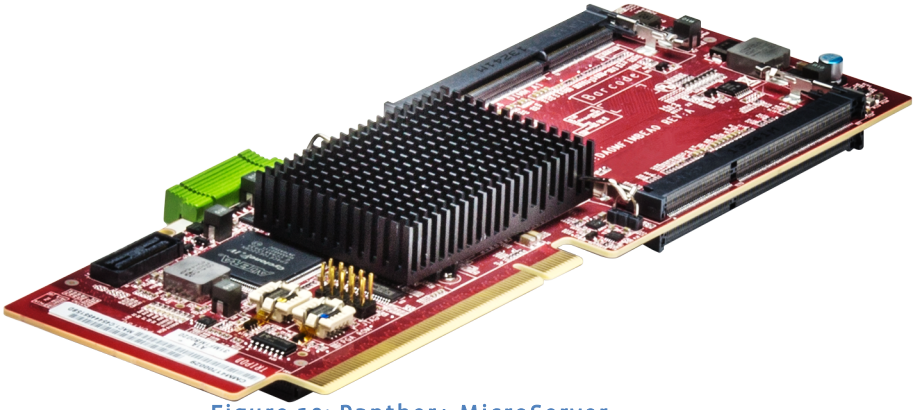

Figure 19: Panther+ MicroServer

6.2.1. Panther+ Feature List

Panther+ MicroServer is based on Intel Avoton SOC, a new generation of Intel Atom processor, its main features are listed below:

- One Intel Avoton SoC, SKU selection:
  - C2750: 8 cores, 2.4GHz, 20W TDP
  - C2550: 4 cores, 2.4GHz, 14W TDP
  - C2350: 2 cores, 1.7GHz, 6W TDP
- Up to four SO-DIMM slots
  - Two channels, two DIMMs per channel
  - DDR3-1600, only support DDR3L (low-voltage, 1.35V)
  - ECC enabled
  - 32 GB max
- One mSATA SSD module
  - SATA3 interface
  - 256 GB max
- One NGFF flash card (M.2)
  - SATA3 or PCI-E x4 interface (BOM Option)
  - 2280 form factor (option to support 2260)
  - 256 GB max
- Three Status LEDs
  - One Blue LED for power
  - One Amber / Orange LED for beep

    - One Yellow-Green LED reserved for diagnostic
- One JTAG connector
    - Reserved for OCP test purpose

As defined in Micro-Sever specification, Panther+ supports below features on the interface to baseboard through the PCI-E x16 golden finger:

- One PCI-E x8 port, Gen2
- One PCI-E x4 port, Gen2
- One 1GbE port (SerDes)
- One SATA2 port
- One USB 2.0 port
- One UART port
- One I2C bus for management bridge IC (FPGA)
- One I2C / SMBus dedicated for Shared-NIC
- Four pins for slot ID (or hardware revision)
- One pin for power button
- One pin for system reset

6.2.2. Panther+ Block Diagram

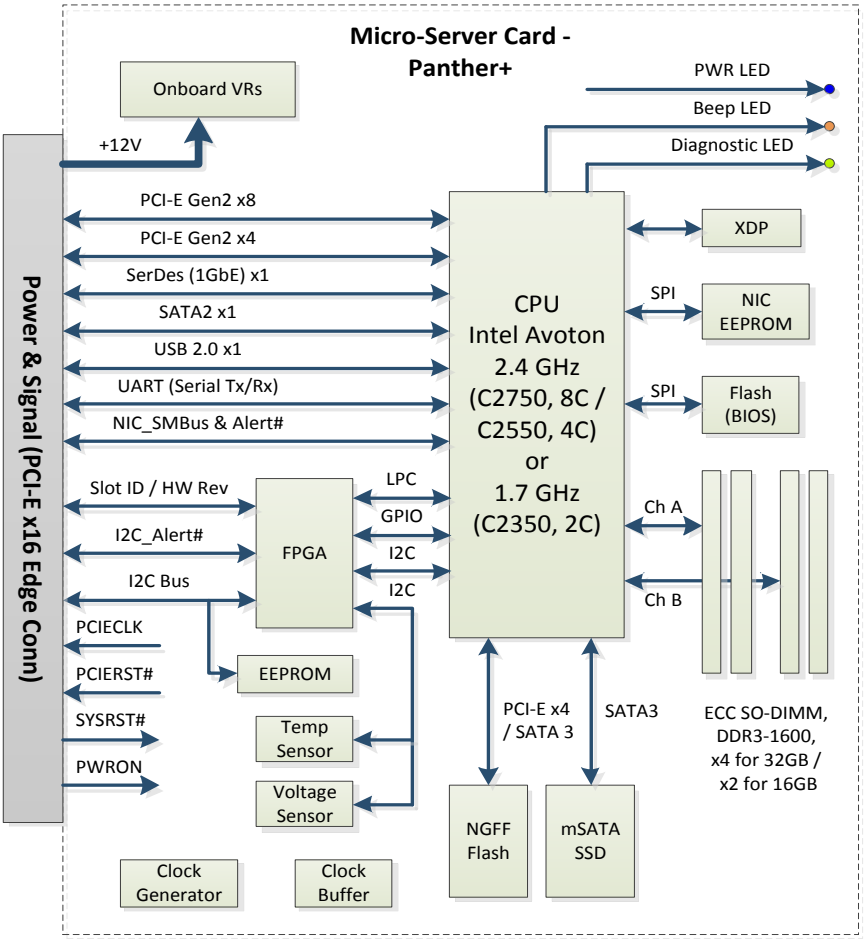

Figure 20: Micro-Server Panther+ Block Diagram

6.2.3. Panther+ SKU Configuration for SixPack-40

Typical use case of FB switch product for Panther+ SKU configuration is below:

- One Intel Avoton SoC
  - C2550: 4 cores, 2.4GHz, 14W TDP
- Four SO-DIMM slots
  - Two channels, two DIMM slots per channel, only one DIMM on channel A
  - 32 GB Max, 8 GB POR
- One mSATA SSD module on SATA3 interface
  - 128 GB POR

6.2.4. SixPack-40 Chassis OOB Architecture

Fabric card has one 5-port SGMII switch and one 16-port SGMII switch for out-of-band communication of different SWE. The OOB architecture of sixpack-40 chassis is shown in the following diagram.

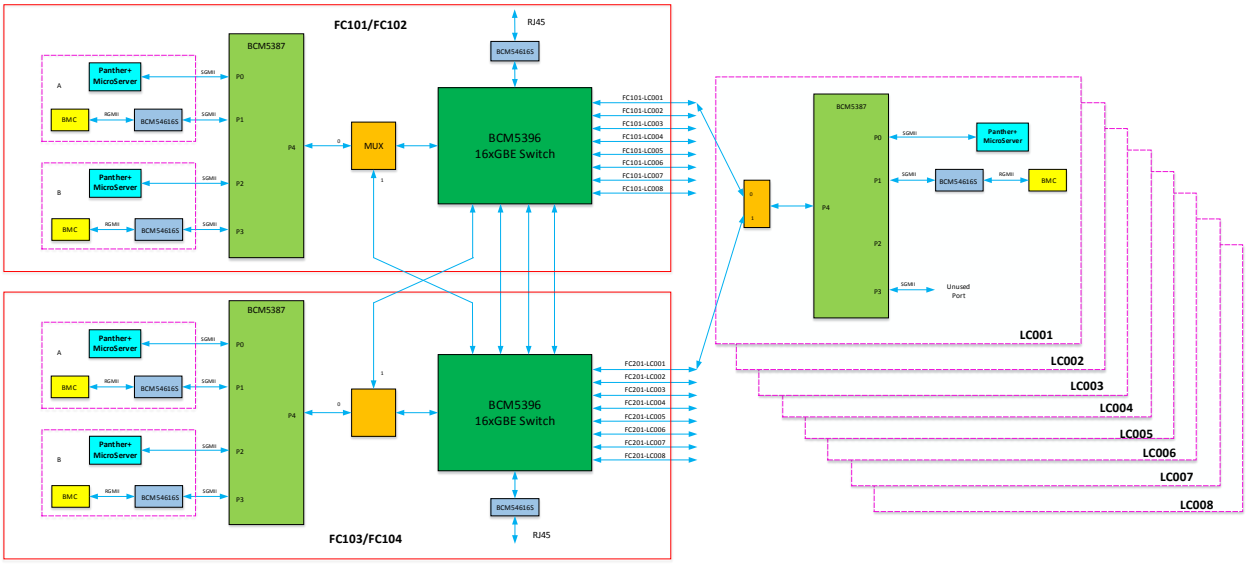

Figure 21: SixPack-40 OOB management architecture

6.3. Chassis Power

Power to the chassis is provided by multiple power supply units. Each PSU is rated to supply up to 3000W at 12V.

Card	SixPack-40 Power Consumption		
	Unit Power	Qty	Power (W)
FAB	350	2	700
LC	200	8	1600
Fan	20	12	240
Total			2540

Table 3: Power Consumption Under worst scenario

The worst scenario is used for the design purpose, in normal operating environment, the typical power consumption is much less than the table above, the following table is a more realistic estimate and can be used for data center power budgeting.

Card	SixPack-40 Power Consumption		
	Unit Power	Qty	Power (W)
FAB	250	2	500
LC	130	8	1040
Fan	10	12	120
Total			1660

Table 4: Typical Power Consumption of SixPack-40 System

2+2 redundancy scheme is used for sixpack because facebook datacenter need to support not only PSU redundancy, but also power feed redundancy.

6.3.1. Power Distribution System

SixPack-40 Power distribution system consists of the following items:

- PSU: 3000W PSU from PowerOne PFE3000-12
- PDB: Power Distribution Board, 4 AC inlet, provide AC input voltage to four PSU.
- BUSBAR: Power bus bar, combine the 12V outputs of four PSU.

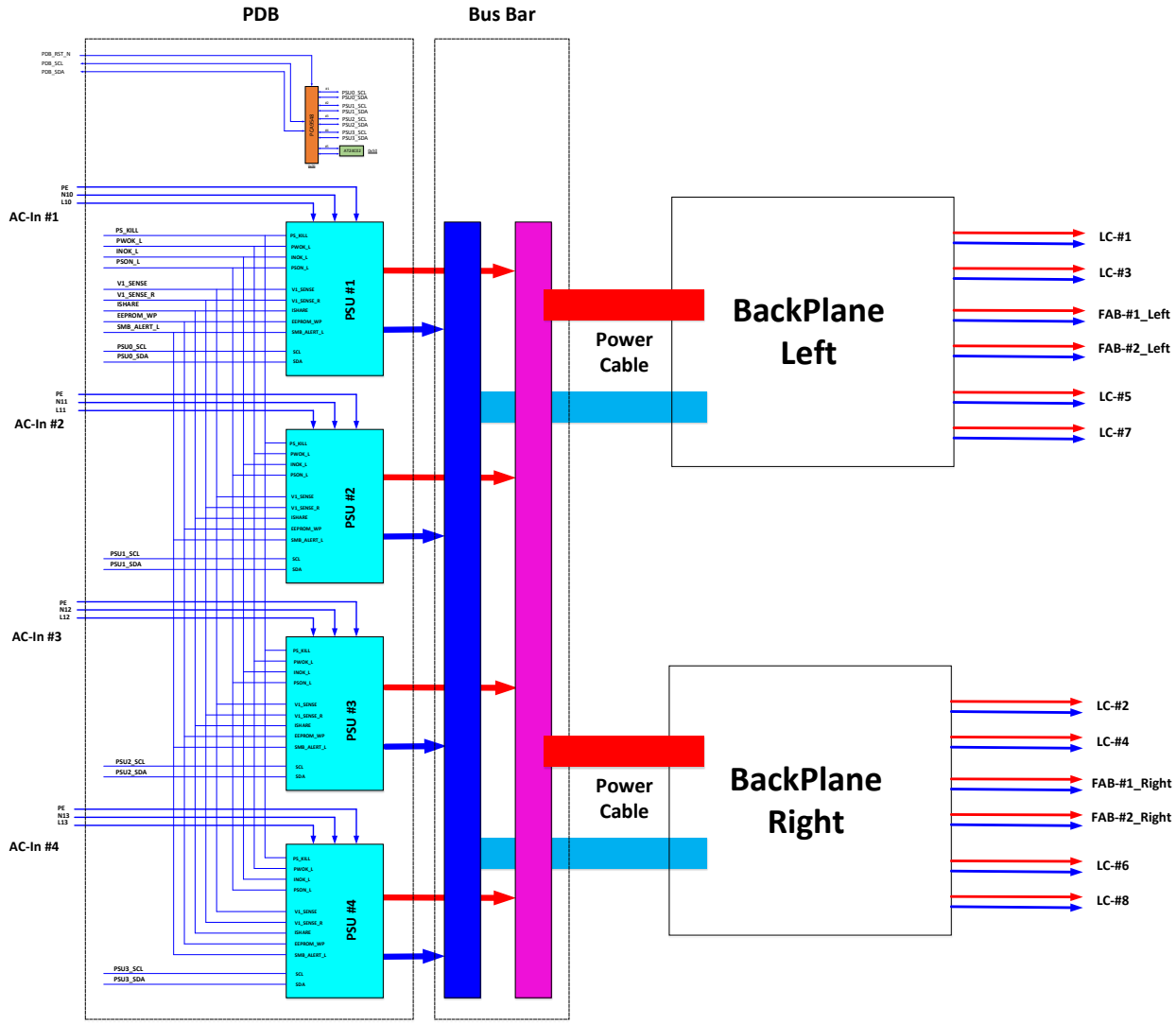

Figure 22: SixPack-40 Power Distribution System

7. SixPack-40 Mechanical

7.1. Dimension Requirement

SixPack-40 is a standard 19-in chassis with 7 RU height.

7.1.1. Chassis

Feature Name	Description	Comment
Chassis width	440mm (17.32”)	Outer dimension
Chassis depth	750mm (29.5”)	Outer dimension
Chassis height	356mm (14”)	Outer dimension

Table 5: SixPack-40 chassis Dimension

7.1.2. PSU

SixPack-40 supports AC power supply unit (PSU). There are 4 PSU inside the sixpack-40 chassis. Each PSU is rated at 3000W with 12V output. The PSU is PowerOne PFE3000-12. All chassis support N+N PSU redundancy, i.e. only half of the PSUs need to be populated to support a fully populated system. Figure 16 shows the AC PSU from PowerOne.

Figure 23: PFE3000-12 PSU

7.1.3. Fan tray

SixPack-40 chassis supports disaggregated architecture, each SWE has one fan-tray, and it is individually controlled by BMC inside that SWE. The fan-tray has two 40mm CR fans.

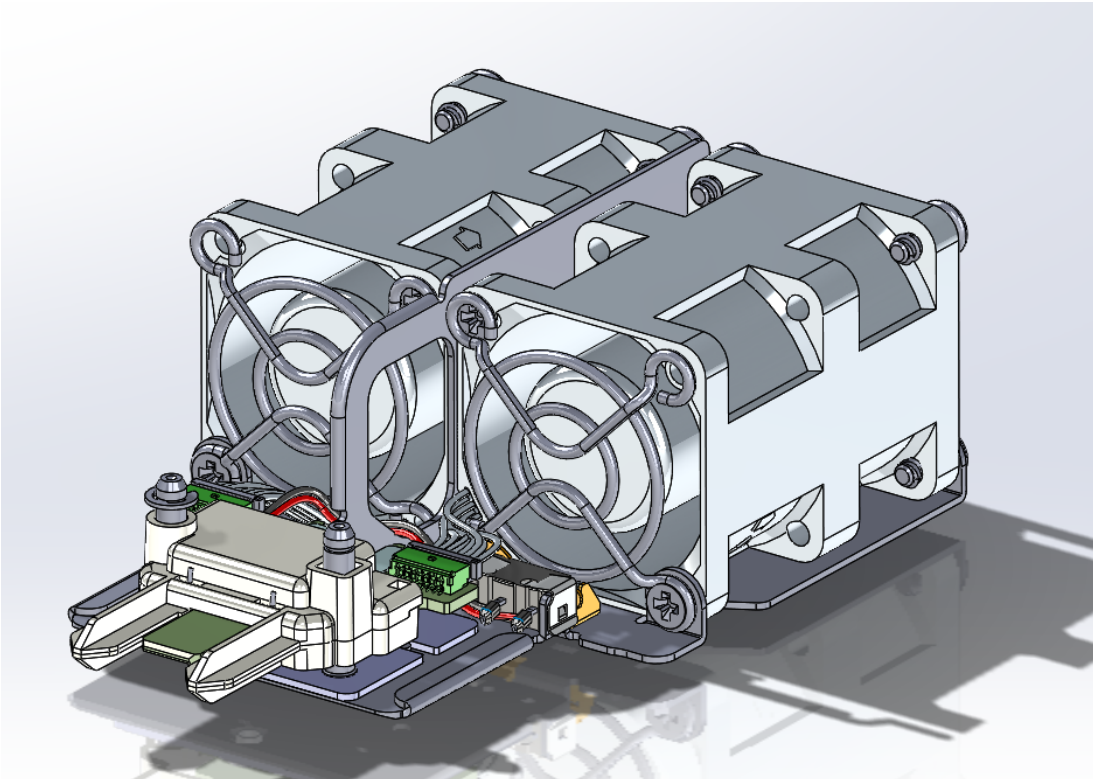

Figure 24: SixPack fan-tray

Fantray use Delta Counter-rotating fan GFB0412EHS-DA06

Item	Description
Rated voltage	12 VDC
Operating voltage	10.8 ~ 12.6 VDC
Input current	1.40A, 1.68A Max Safety Current on label: 1.82A
Input power	16.80W, Max 20.16W
speed	Front 16000, Rear 15400 RPM +/-10%
Max Air flow at zero static pressure	66.824 mmH2O, Min 54.127 mmH2O 2.63 InchH2O, Min 2.131 InchH2O
acoustic	64.5 dB-A
Lead Wire	Front Fan Black Wire Negative (-)

	Red Wire Positive (+) Yellow wire frequency (-FOO) Blue wire speed control (-PWM)
	Rear Fan grey Wire Negative (-) brown Wire Positive (+) white wire frequency (-FOO) green wire speed control (-PWM)

Table 6: Fan specification

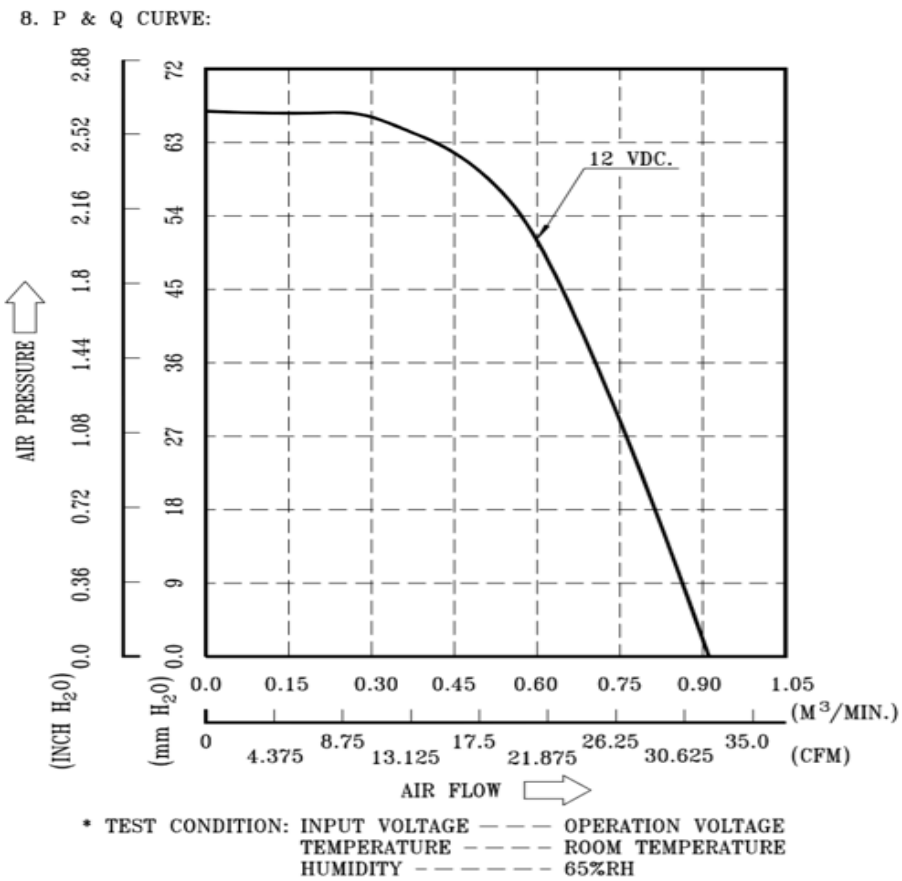

Figure 25: PQ curve of CR fan GFB0412EHS-DA06

7.2. Temperature Sensors

Each individual Line Card (LC) and Fabric Card (FAB) have multiple temperature sensors to monitor temperature.

Additionally, over-temperature thresholds are configurable and an alert mechanism is provided to enable thermal shutdown and / or an increase in airflow. The sensors are accurate to +/-2C.

The ambient temperature sensor uses *TMP75* from Texas Instruments or an equivalent part from other vendors. 3 TMP75 are used in Sixpack-40 line card, please refer to SixPack-

40 Line hardware specification for more details.

7.3. FRU and Module Numbering

Each module or FRU has a user identification number. The following table lists the FRU in SixPack-40 system.

SixPack-40 Chassis	Notes
LC1 – LC8	SWE name LC001, LC002, LC003, LC004, LC005, LC006, LC007 LC008
FAB1 – FAB2	SWE name FC101, FC102, FC103, and FC104
FAN1 – FAN12	Fan-tray match SWE name LC001, LC002, LC003, LC004, LC005, LC006, LC007, LC008 FC101, FC102, FC103, FC104

Table 7: FRU Numbering

7.4. Slot ID

Every Switch Element has one unique slot ID.

LC SLOT_ID[3:0]	Indication
0000	Slot-1, LC001
1001	Slot-2, LC002
0001	Slot-3, LC003
1001	Slot-4, LC004
0010	Slot-5, LC005
1010	Slot-6, LC006
0011	Slot-7, LC007
1011	Slot-8, LC008

Table 8: :Line Card Slot ID

FAB_SLOT_ID[1:0]	Indication
00	FAB Slot-1, left, FC101
01	FAB Slot-2, left, FC103
10	FAB Slot-1, right, FC102
11	FAB Slot-2, right, FC104

Table 9: Fabric Card Slot ID

8. Host CPU and BMC Functional features

8.1. BIOS Feature List

The Panther+ BIOS design will follow the same requirements as the generic Micro-Server card. Highlighted key items as below:

- UEFI compatible
- Configuration and features
  - Disable unused devices
  - BIOS setup menu
  - SoC settings to allow tuning to achieve the optimal combination of performance and power consumption
- BIOS settings tools
- Default boot device priority
  - Network / PXE -> mSATA SSD module -> NGFF flash card -> Other removable devices
- PXE boot
  - Supports PXE boot and provide the ability to modify the boot sequence. When PXE booting, the card first attempts to boot from the first Ethernet device (eth0). If this fails, the PXE boot will attempt on the next Ethernet device.
- iSCSI network boot
- Other boot options
  - Also supports booting from SATA/SAS and USB interfaces
  - Provides the capability to select boot options
- Remote BIOS update
  - Scenario 1: Sample / audit BIOS settings
  - Scenario 2: Update BIOS with pre-configured set of BIOS settings
  - Scenario 3: BIOS / firmware update with a new revision
  - Update from the operating system over the LAN
  - Can complete BIOS update or setup change with a single reboot (no PXE boot, no multiple reboots)
  - No user interaction (e.g., prompts)
  - BIOS updates and option changes do not take longer than five minutes to complete
  - Can be scripted and propagated to multiple machines
- Event log
  - Implement SMBIOS type 15 per SMBIOS specification Rev 2.6
  - Hold more than 500 event records (assuming the maximum event record length is 24 bytes, then the size will be larger than 12KB)
  - Each event record includes enhanced information identifying the error source device's vendor ID, card slot ID, and device ID
  - A system access interface and application software to retrieve and clear the event log from the BIOS
- Logged errors
  - CPU / memory errors

    - PCI-E errors
    - SATA errors
    - POST errors
    - System reboot events
    - Sensor values exceeding warning or critical thresholds
- Error thresholds
    - Setting must be enabled for both correctable and uncorrectable errors
    - Threshold for Memory Correctable ECC is TBD
    - PCI-E error, follow chipset vendor's suggestion
- POST codes
    - To be displayed on debug card
    - To be provided on the serial console

8.2. BMC Feature Support

The BMC on baseboard will support DCMI 1.5 plus an extended set of commands to enable support for the multi-node environment. The following is a list of features that Panther+ BIOS need to support in relevant BMC firmware design:

- All SEL commands
- All sensor commands
- All SDR commands
- LAN print / set commands
- Power on/off/cycle / hardware reset / soft reset commands
- Chassis identify force on/off
- Micro-Server card reset cold/warm
- Micro-Server card info
- SoL activate/de-activate
- FRU list
- System boot parameters

9. Transceivers and cables

9.1. 40G optics

- QSFP+ SR4 40G transceiver, (Must Support)
- QSFP+ LR4 40G transceiver, (Must Support)

9.2. 40G Cables

- QSFP+ 40GE to QSFP+ 40GE cable, 1M, 2M, 3M (must support)
- QSFP+ 40GE to 4 SFP+ 10GE fanout cable, 1M, 2M, 3M (must support)

10. Environmental Requirements and Reliability

10.1. Environmental Requirements

The SixPack-40 chassis should support the related system(s) to meet the following environmental requirements:

Gaseous contamination: Severity Level G1 per ANSI/ISA 71.04-1985

Operating and storage relative humidity: 10% to 85% (non-condensing)

Storage temperature range: -40°C to +70°C (long-term storage)

Transportation temperature range: -55°C to +85°C (short-term storage)

Operating altitude with no de-rating to 1,000m (3,300 feet)

10.2. Vibration and Shock

IEC 68-2-36, IEC 68-2-6

10.3. Mean Time Between Failures (MTBF) Requirements

TBD

10.4. Regulations

The SixPack-40 chassis should support the related system(s) to obtain CB reports by the vendor(s). Facebook will need these documents to have rack level CE.

Environment	
Temperature	0 to 45C, sea level
Humidity	Relative humidity: 5% to 85% in operation, non-condensing
Storage	5km
Acoustic	55dbA
Vibration	IEC 68-2-36, IEC 68-2-6
Environment Regulatory Compliance	Must Comply with ROHS requirement through 2017
Regulatory and Safety	
Safety	CAN/CSA-C22.2 NO. 60950-1-07
	UL 60950-1 (2nd Edition), am 1(2011)
	IEC 60950-1 (2nd Edition), Am 1:2009
	EN 60950-1:2006 + A11:2009 + A1:2010 + A12:2011
	EN 60825-1:2007
	EN 60825-2:2004+A1

	ZEK 01.4-811.11 (For GS)
EMC	FCC Title 47 CFR, part 15, Subpart B, 2012 (for frequency > 1G) Class A
	ICES-003: 2012 Issue 5(Canada)Class A
	VCCI V-3:2013.04 /V-4:2012.04 (Japan) Class A
	AS/NZS CISPR 22:2009+A1:2010 (Australia/New Zealand) Class A
	EN 55022:2010+AC: 2011 Class A
	EN 61000-3-3:2008
	EN 55024:2010
	EN 300 386 (V1.6.1):2012
	IEC 61000-4-2: 2008 (Criteria A)
	IEC 61000-4-3: 2010 (Criteria A)
	IEC 61000-4-4: 2012 (Criteria A)
	IEC 61000-4-5: 2005 (Criteria A)
	IEC 61000-4-6: 2008 (Criteria A)
	IEC 61000-4-8: 2009 (Criteria A)
	IEC 61000-4-11: 2004 (Criteria A/A/C)

11. Labels and Markings

11.1. PCBA Labels and Markings

SixPack-40 PCBAs shall include the following labels on the component side of the boards. The labels shall not be placed in such a way that may cause them to disrupt the functionality or the airflow path of the system.

Table 10 PCBA Label Requirements

Description	Type	Barcode Required?
Safety markings	Silkscreen	No
Vendor P/N, S/N, REV (revision would increment for any approved changes)	Adhesive label	Yes
Vendor logo, name & country of origin	Silkscreen	No
PCB vendor logo, name	Silkscreen	No
Facebook P/N	Adhesive label	Yes
Date code (industry standard: WEEK/YEAR)	Adhesive label	Yes
DC input ratings	Silkscreen	No
RoHS compliance	Silkscreen	No
WEEE symbol:  The motherboard will have the crossed out wheeled bin symbol to indicate that it will be taken back by the manufacturer for recycling at the end of its useful life. This is defined in the European Union Directive	Silkscreen	No

2002/96/EC of January 27, 2003 on Waste Electrical and Electronic Equipment (WEEE) and any subsequent amendments.		

11.2. Chassis Labels and Markings

12. Software and Firmware Specification

The following sections define the software/firmware requirements..

13. Appendix

13.1. Appendix: Commonly Used Acronyms

This section provides definitions of acronyms used in the system specifications.

ACPI – advanced configuration and power interface

AHCI – advanced host controller interface

ANSI – American National Standards Institute

API – application programming interface

ASIC – application-specific integrated circuit

BIOS – basic input/output system

BMC – baseboard management controller

BP – backplane

CFM – cubic feet per minute (measure of volume flow rate)

DCMI – Data Center Manageability Interface

DDR3 – double data rate type 3

DHCP – dynamic host configuration protocol

DIMM – dual inline memory module

DPC - DIMMs per memory channel

DRAM – dynamic random access memory

EEPROM - electrically erasable programmable read-only memory

EIA – Electronic Industries Alliance

EMC – electromagnetic compatibility

EMI – electromagnetic interference

FRU – field replaceable unit

FTP – file transfer protocol

GPIO – general purpose input output

I^2C – inter-integrated circuit

LC – Line Card

LAN – local area network

LPC – low pin count

LS – least significant

MAC – media access control

MTBF – mean time between failures

MUX – multiplexer

NIC – network interface card

OOB – out of band

PCB – printed circuit board

PCIe – peripheral component interconnect express

PCH – platform control hub

PDB – power distribution board

PDU – power distribution unit

PNP – plug and play

POST – power-on self-test

PSU – power supply unit

PWM – pulse-width modulation

PXE – preboot execution environment

QSFP – Quad small form-factor pluggable

RM – Rack Manager

RMA – remote management agent

RU – rack unit (1.75”)

SAS – serial-attached small computer system interface (SCSI)

SATA – serial AT attachment

SCK – serial clock

SDA – serial data signal

SFF – small form factor

SFP - small form-factor pluggable

SMBUS – systems management bus

SMBIOS – systems management BIOS

SOL – serial over LAN

SPI – serial peripheral interface

SSD – solid-state drive

TDP – thermal design power

TOR – top of rack

TPM – trusted platform module

U – rack unit

UART – universal asynchronous receiver/transmitter

UEFI – unified extensible firmware interface

UL – Underwriters Laboratories