Bryce Canyon

IO Module_Broadcom IOC

PCB P/N: 16318

Version: 2

Layer: 8 Layers

wiwynn
Bryce Canyon_IO Module
8F, 90, Sec.1, Xintai 5th Rd., Xizhi Dist.,
New Taipei City 22102, Taiwan (R.O.C.)
http://www.wiwynn.com

Title	COVER PAGE	
Size A3	Document Number Bryce Canyon_IO Module	Rev 2
Date: Friday, December 08, 2017	Sheet 1 of 47	

TABLE OF CONTENTS

PAGE	PAGE TITLE	PAGE	PAGE TITLE	PAGE	PAGE TITLE
01	COVER PAGE	41	SAS3008_POWER_1		
02	TABLE OF CONTENTS	42	SAS3008_POWER_2		
03	BLOCK DIAGRAM	43	SAS3008_POWER&GND		
04	POWER DISTRIBUTION	44	SAS3008_I2C&UART LEVELSHIFT		
05	POWER FLOW	45	SAS3008_EXT_MINI SAS CONN*2		
06	POWER SEQUENCE	46	SAS3008_SAS CONN LED		
07	CLOCK TREE	47	SCREW HOLE		
08	STACK-UP				
09	I2C TOPOLOGY				
10	UART TOPOLOGY				
11	XCEDE CONNECTOR				
12	OCP2.0_MEZZ CONN_A				
13	OCP2.0_MEZZ CONN_B & C				
14	USB2.0 x1				
15	POWER & RESET BUTTON				
16	RESERVE				
17	TPM				
18	I2C SWITCH & BUFFER				
19	IOM I2C DEVICE				
20	AST2500 I2C DDR LPC				
21	AST2500 UART LAN SPI				
22	AST2500 FAN ADC				
23	AST2500 POWER				
24	AST2500 STRAP PIN				
25	AST2500 VOLTAGE SENSE				
26	DEBUG PORT				
27	HOT SWAP CONTROLLER ADM1278				
28	PWRSW_P5V_STBY_TPS53318				
29	PWRSW_P3V3_STBY_TPS53318				
30	PWRLDO_P2V5_STBY_TPS74801				
31	PWRSW_P1V8_STBY_TPS53312				
32	PWRLDO_P1V2_STBY_TPS74801				
33	PWRLDO_P1V15_STBY_TPS74801				
34	PWRLDO_P1V5_STBY_TPS74801				
35	PWRSW_P0V975_STBY_VT235WFQX				
36	SAS3008_PCIE & VIA				
37	SAS3008_SAS & VIA				
38	SAS3008_GPIO & USB & ETH				
39	SAS3008_MISC				
40	SAS3008_FLASH				

wiwynn
Bryce Canyon_IO Module
8F, 90, Sec.1, Xintai 5th Rd., Xizhi Dist.,
New Taipei City 22102, Taiwan (R.O.C.)
http://www.wiwynn.com

BLOCK DIAGRAM

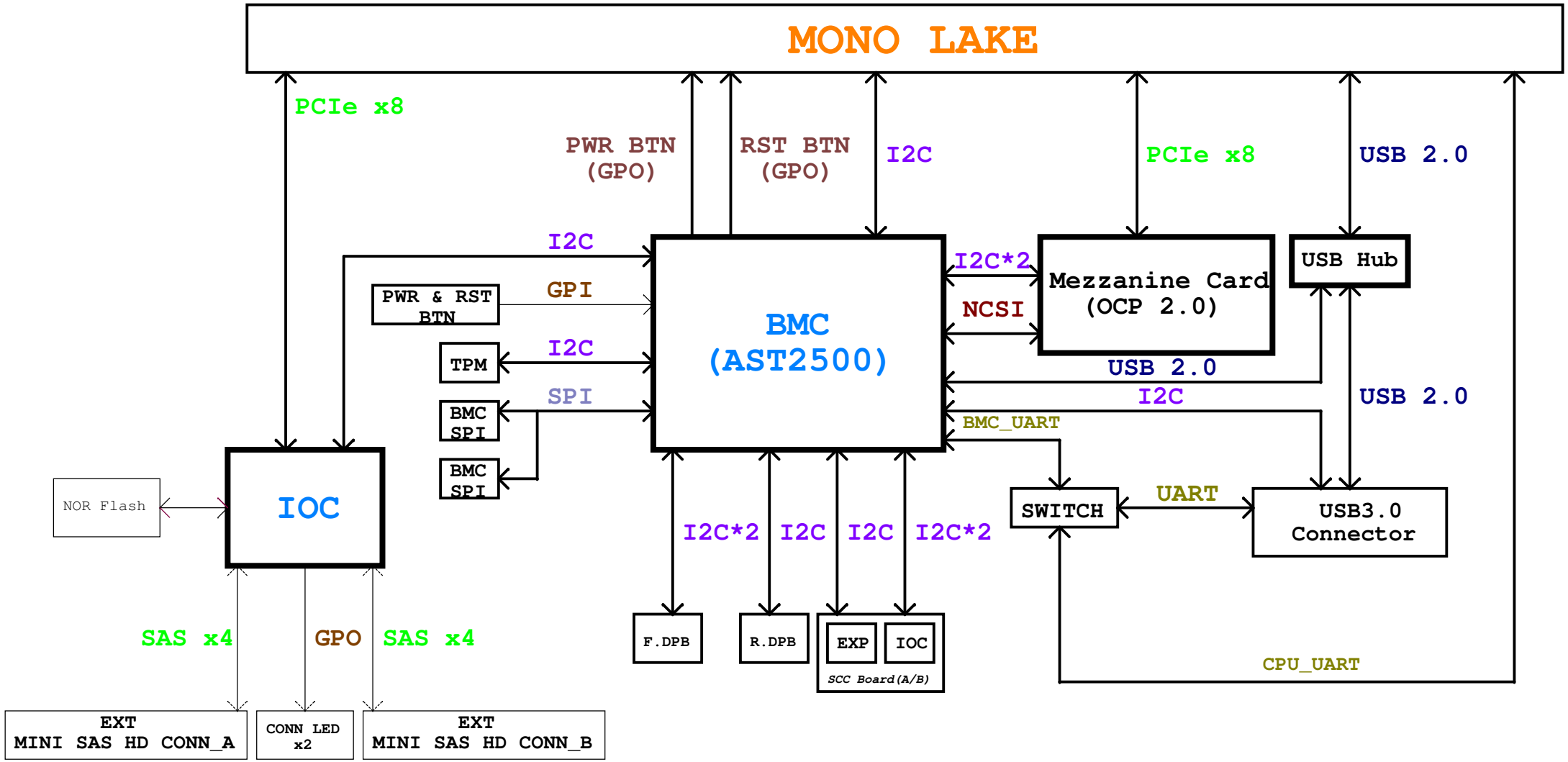

wiwynn

Bryce Canyon_IO Module
8F, 90, Sec.1, Xintai 5th Rd., Xizhi Dist., New Taipei City 22102, Taiwan (R.O.C.)
http://www.wiwynn.com

Title	BLOCK DIAGRAM
Size A3	Document Number: Bryce Canyon_IO Module
Rev 2	
Date: Friday, December 08, 2017	Sheet 3 of 47

POWER DISTRIBUTION

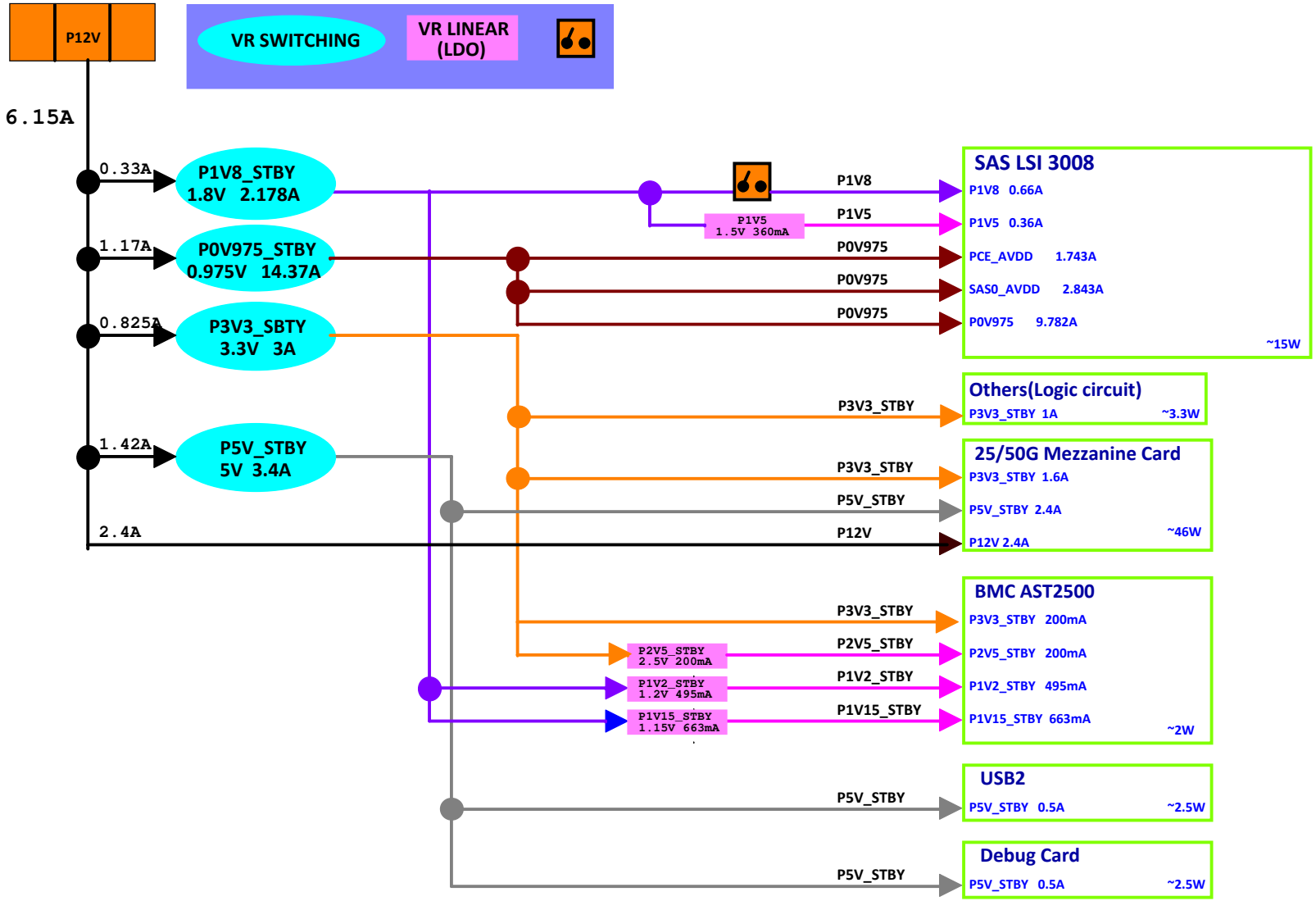

wiwynn

Bryce Canyon_IO Module
8F, 90, Sec.1, Xintai 5th Rd., Xizhi Dist., New Taipei City 22102, Taiwan (R.O.C.)
http://www.wiwynn.com

Title	POWER DISTRIBUTION
Size A3	Document Number: Bryce Canyon_IO Module
Rev 2	
Date: Friday, December 08, 2017	Sheet 4 of 47

POWER FLOW

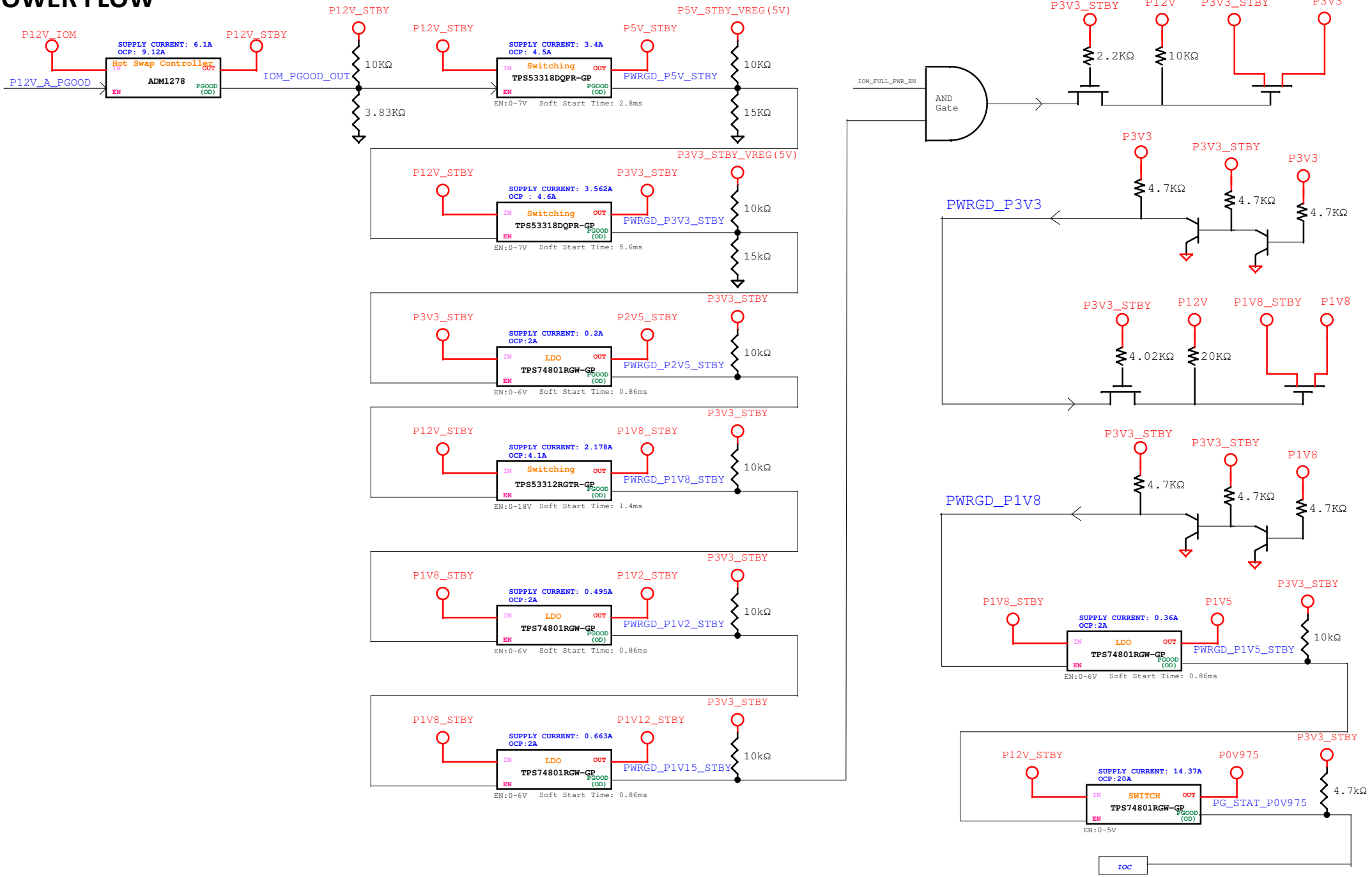

wiwynn

Bryce Canyon_IO Module
8F, 90, Sec.1, Xintai 5th Rd., Xizhi Dist., New Taipei City 22102, Taiwan (R.O.C.)
http://www.wiwynn.com

Title	POWER FLOW	
Size A2	Document Number Bryce Canyon_IO Module	Rev 2
Date: Friday, December 08, 2017	Sheet 5 of 47	

POWER SEQUENCE

SOURCE	DESTINATION	SIG/PWR
F./R.DPB(P12V_IOM)	IO MODULE	P12V_STBY
P12V_STBY	USB, DEBUG CARD, 25/50G	P5V_STBY
P12V_STBY	BMC, 25/50G, others	P3V3_STBY
P3V3_STBY	BMC	P2V5_STBY
P12V_STBY	BMC	P1V8_STBY
P1V8_STBY	BMC	P1V2_STBY
P1V8_STBY	BMC	P1V15_STBY
IOM_STBY_PGOOD	BMC	FM_BMC_RESET_N
BMC(FULL POWER ENABLE)	25/50G, others	P3V3
P1V8_STBY	IOC	P1V8
P1V8_STBY	IOC	P1V5
P12V_STBY	IOC	P0V975
P0V975_PWRGOOD	BMC	IOM_FULL_PGOOD
BMC	F.DPB	COMP_PWR_EN
MONO LAKE	IOC, 25/50G	PCIE_RST_N

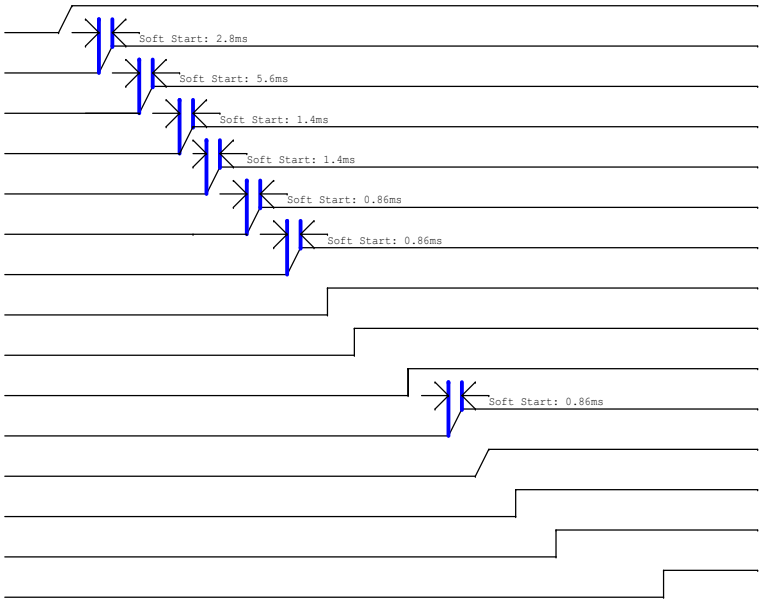

wiwynn
Bryce Canyon_IO Module
8F, 90, Sec.1, Xintai 5th Rd., Xizhi Dist.,
New Taipei City 22102, Taiwan (R.O.C.)
http://www.wiwynn.com

Title	POWER SEQUENCE	
Size A3	Document Number Bryce Canyon_IO Module	Rev 2
Date: Friday, December 08, 2017	Sheet 6 of 47	

CIOCK TREE

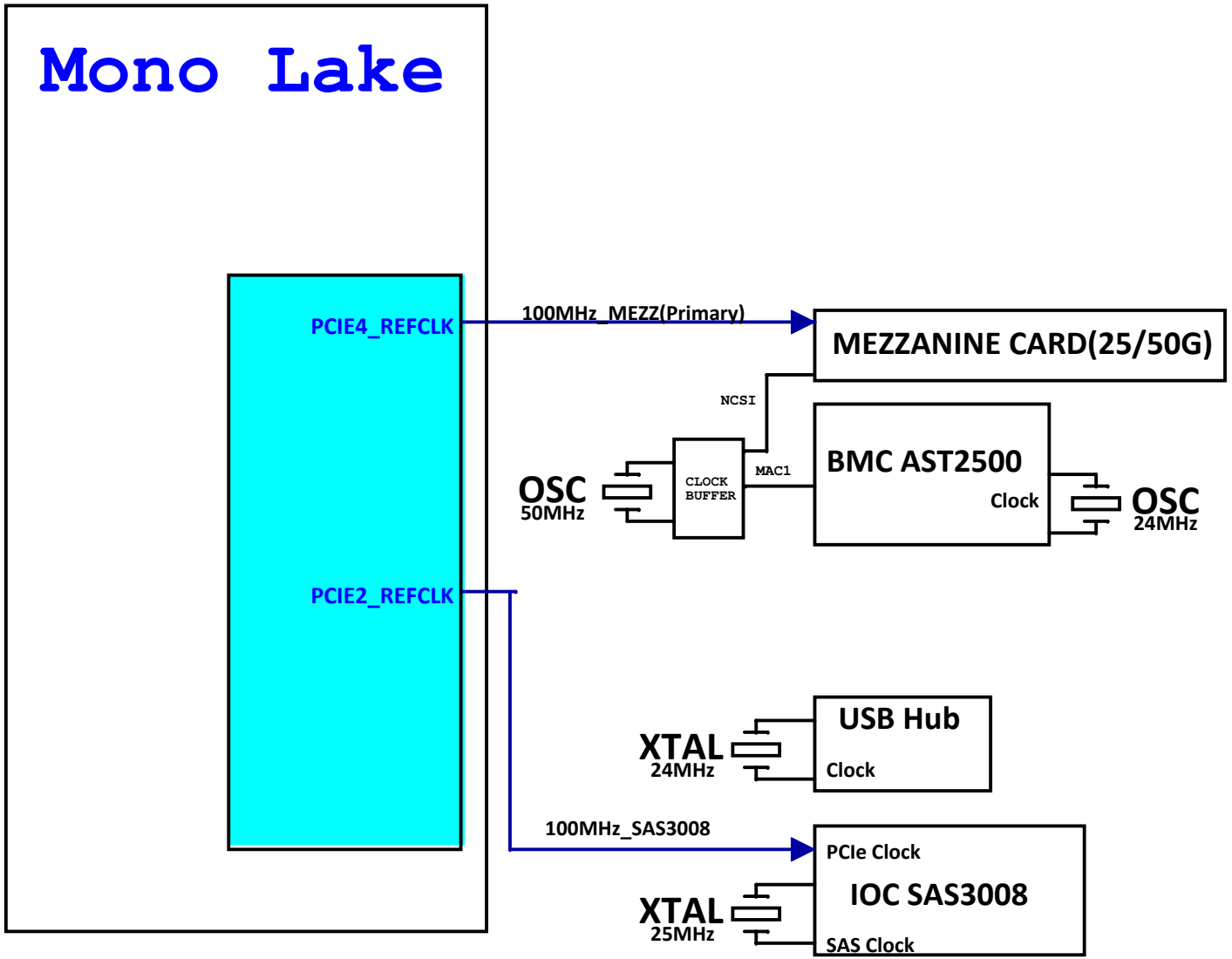

wiwynn

Bryce Canyon_IO Module
8F, 90, Sec.1, Xintai 5th Rd., Xizhi Dist., New Taipei City 22102, Taiwan (R.O.C.)
http://www.wiwynn.com

Title	CLOCK TREE	
Size A3	Document Number Bryce Canyon_IO Module	Rev 2
Date: Friday, December 08, 2017	Sheet 7 of 47	

STACKUP INFORMATION

Board Number:	16318-SB
Project name:	Bryce Canyon
Model Name:	IOM_Broadcom
Layer Count:	8 Layer
Date:	2017/2/6
Medium Loss Material:	TU863+VLP / NPG171+VLP (Tg : 170/Td : 320)
Gold Finger(Y/N):	N
Customer:	Flona
EE engineer	Kent Tsai
SI Engineer	Eason YS Chen

Version 01

	Layer	Cu oz	Thickness Wiwynn		Glass/Copper Style	Er Wiwynn	Df(1G)
	Mask		0.5			3.4	
Top	Signal	3/8 oz+plating	1.7				
	Prepreg		3			3.9	
L2	GND	1 oz	1.3				
	Core		4			3.9	
L3	Signal	1 oz	1.3				
	Prepreg		16.4			4.2	
L4	POWER	1 oz	1.3				
	Core		4			3.8	0 0
L5	POWER	1 oz	1.3	0.0	0		
	Prepreg		16.4	0	0	4.2	0 0
L6	Signal	1 oz	1.3	0	0		
	Core		4	0	0	3.9	0 0
L7	GND	1 oz	1.3	0	0		
	Prepreg		3	0	0	3.9	0 0
Bottom	Signal	3/8 oz+plating	1.7	0	0		
	Mask		0.5	0		3.4	0 0
Thickness requirement: 1.6 ± 10% mm		mil	63				
		mm	1.60				

Single Ended Type(mil)

Imp Variation	50 Inner/Outer+/-5ohm			
Bus	MISC./I2C			
Type	SE			
Layers	1,3,6,8			
	Wiwynn			
	Width	Imp	Width	Imp
S1	5(L2)	50.08		
P2	reference layer			
S3	5(L2/L4)	49.28		
P4	reference layer			
P5	reference layer			
S6	5(L5/L7)	49.28		
P7	reference layer			
S8	5(L7)	50.08		

Differential Type(mil)

Imp Variation	85 Inner/Outer+/-10%						100 Inner/Outer+/-10%						97 Outer+/-10%						92 Outer+/-10%					
Bus	PCIe/Clock/USB						Clock/SATA						BGA Break out(SAS.SATA)						BGA Break out(PCIE)					
Type	DP						DP						DP						DP					
Layers	1,3,6,8						1,3,6,8						1,8						1,8					
	Wiwynn						Wiwynn						Wiwynn						Wiwynn					
	Width	Space	Imp	Width	Space	Imp	Width	Space	Imp	Width	Space	Imp	Width	Space	Imp	Width	Space	Imp	Width	Space	Imp	Width	Space	Imp
S1	5.75(L2)	6.5	85.36				4.9(L2)	11.1	96.82				3.5(L2)	4					3.75(L2)	3.5				
P2	reference layer						reference layer						reference layer						reference layer					
S3	5.5(L2/L4)	7.5	84.9				4(L2/L4)	8	97.59															
P4	reference layer						reference layer						reference layer						reference layer					
P5	reference layer						reference layer						reference layer						reference layer					
S6	5.5(L5/L7)	7.5	84.9				4(L5/L7)	8	97.59															
P7	reference layer						reference layer						reference layer						reference layer					
S8	5.75(L7)	6.5	85.36				4.9(L7)	11.1	96.82				3.5(L7)	4					3.75(L7)	3.5				

wiwynn

Bryce Canyon_IO Module
8F, 90, Sec.1, Xintai 5th Rd., Xizhi Dist., New Taipei City 22102, Taiwan (R.O.C.)
http://www.wiwynn.com

Title	STACK UP	
Size A3	Document Number Bryce Canyon_IO Module	Rev 2
Date: Friday, December 08, 2017	Sheet 8 of 47	

I2C TOPOLOGY

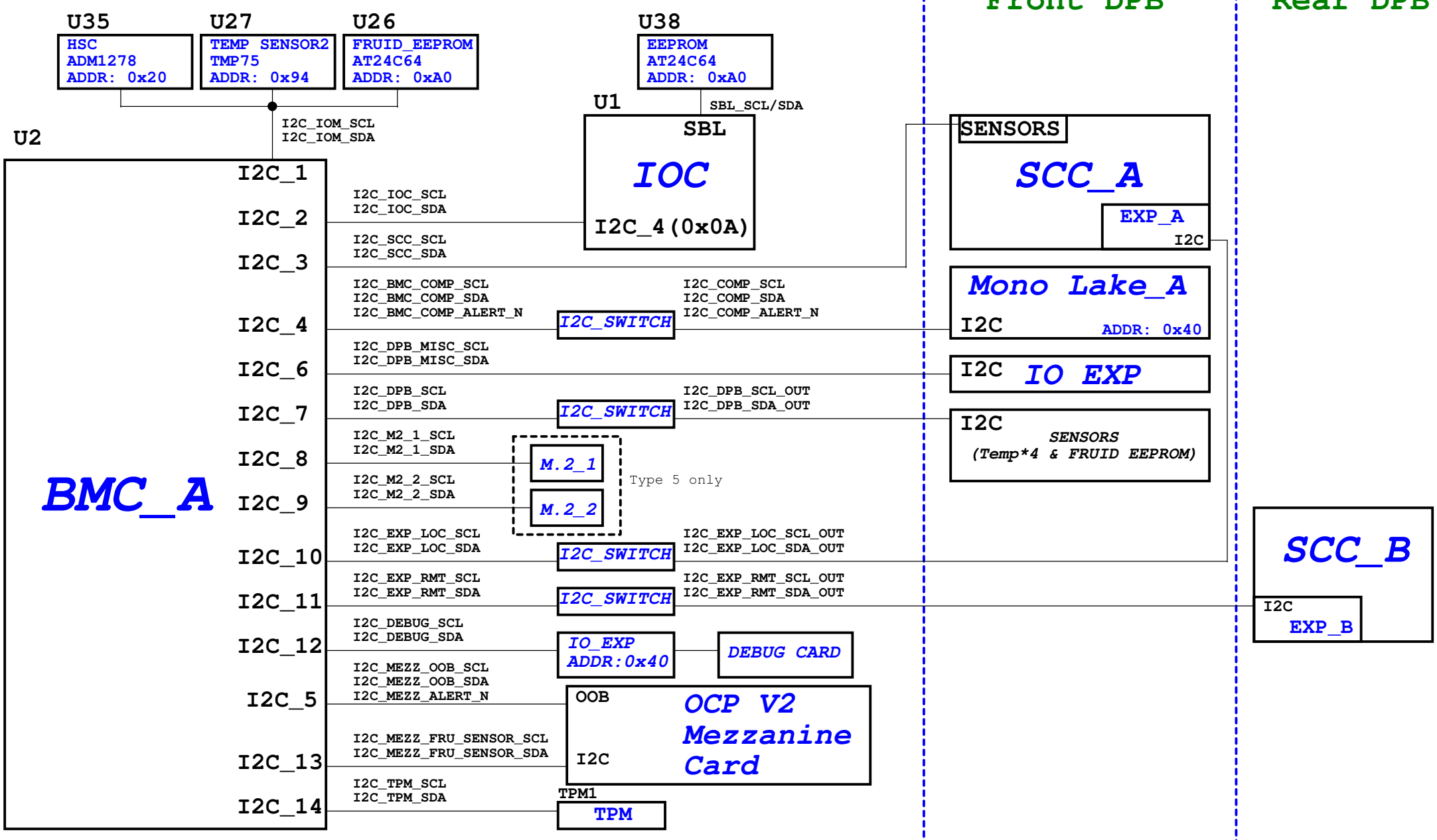

wiwynn

Bryce Canyon_IO Module
8F, 90, Sec.1, Xintai 5th Rd., Xizhi Dist., New Taipei City 22102, Taiwan (R.O.C.)
http://www.wiwynn.com

Title	I2C TOPOLOGY	
Size A3	Document Number Bryce Canyon_IO Module	Rev 2
Date: Friday, December 08, 2017	Sheet 9 of 47	

UART TOPOLOGY

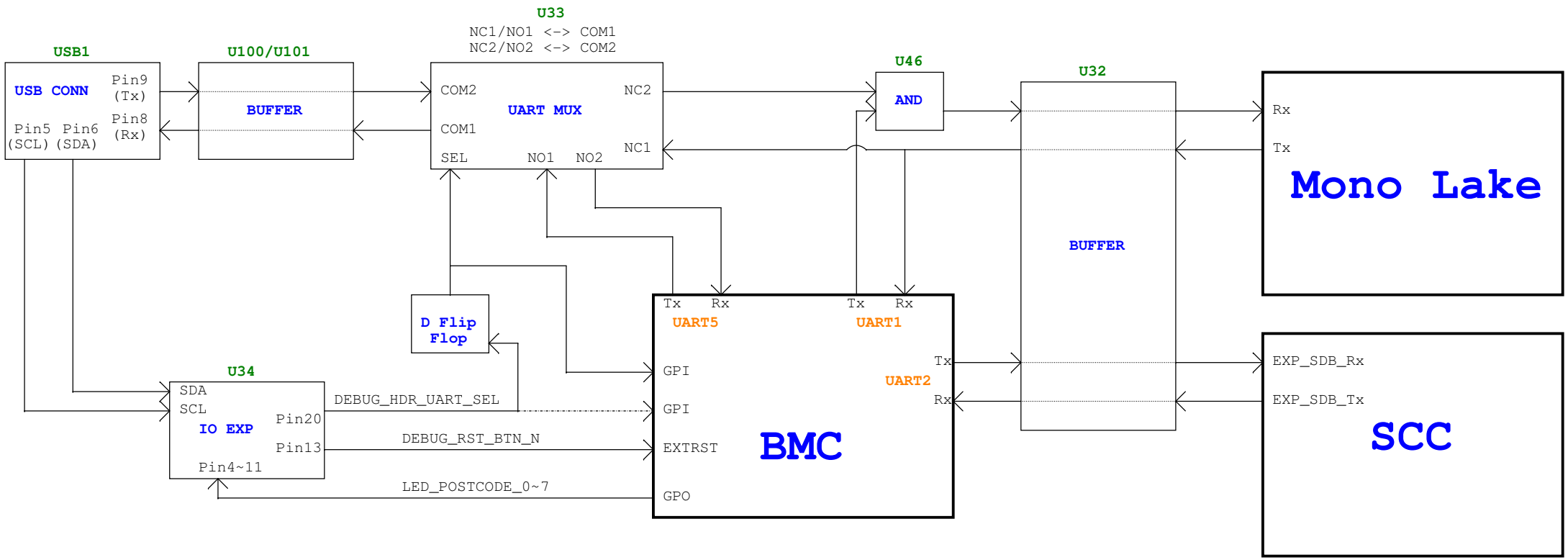

wiwynn

Bryce Canyon_IO Module
8F, 90, Sec.1, Xintai 5th Rd., Xizhi Dist., New Taipei City 22102, Taiwan (R.O.C.)
http://www.wiwynn.com

Title	CLOCK DIAGRAM
Size A3	Document Number: Bryce Canyon_IO Module
Rev	2
Date:	Friday, December 08, 2017
Sheet	10 of 47

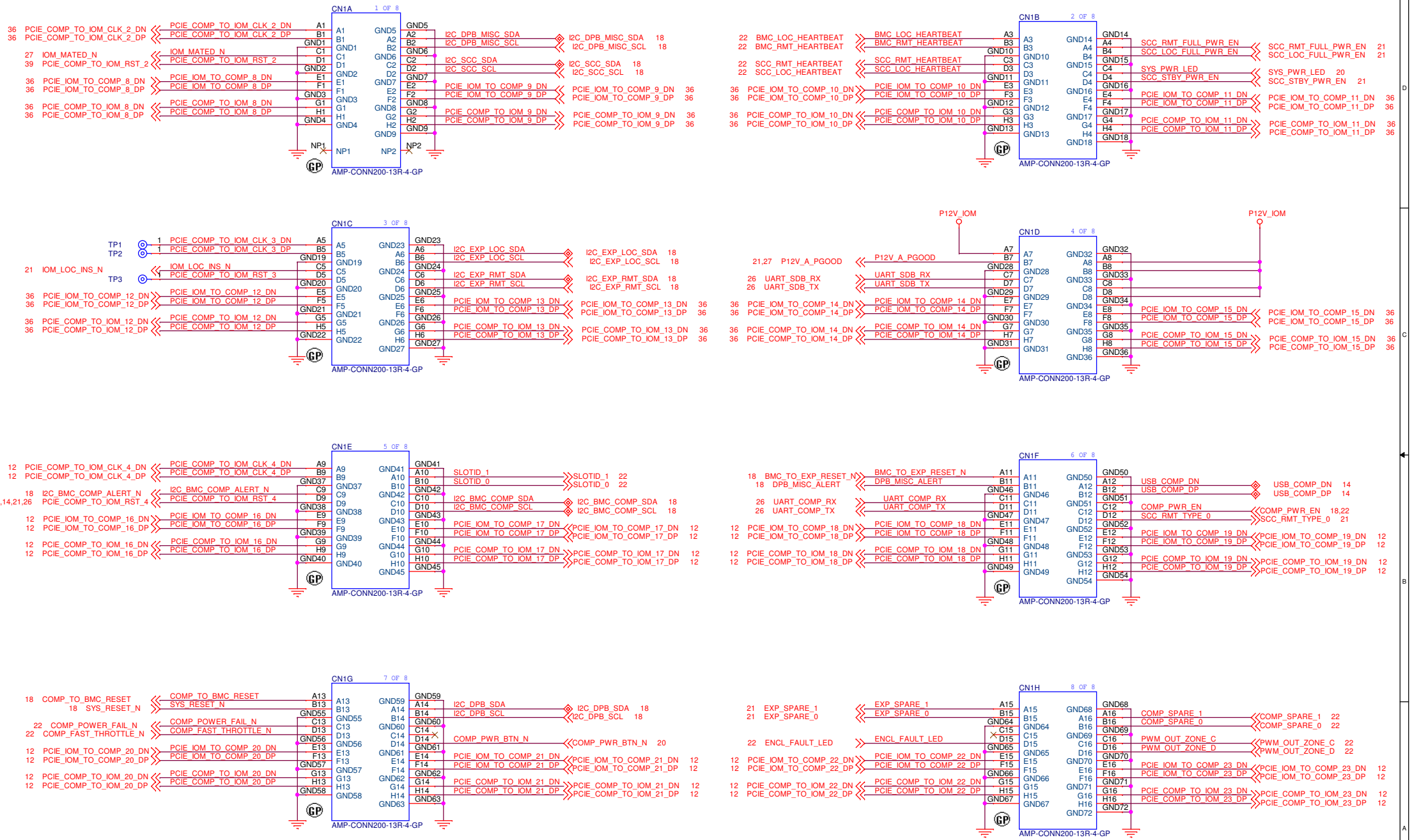

wiwynn

Bryce Canyon_IO Module
8F, 90, Sec.1, Xintai 5th Rd., Xizhi Dist.,
New Taipei City 22102, Taiwan (R.O.C.)
http://www.wiwynn.com

Title	XCEDE CONNECTOR
Size A3	Document Number: Bryce Canyon_IO Module
Rev	2
Date: Friday, December 08, 2017	Sheet 11 of 47

OCP2.0 MEZZ_A

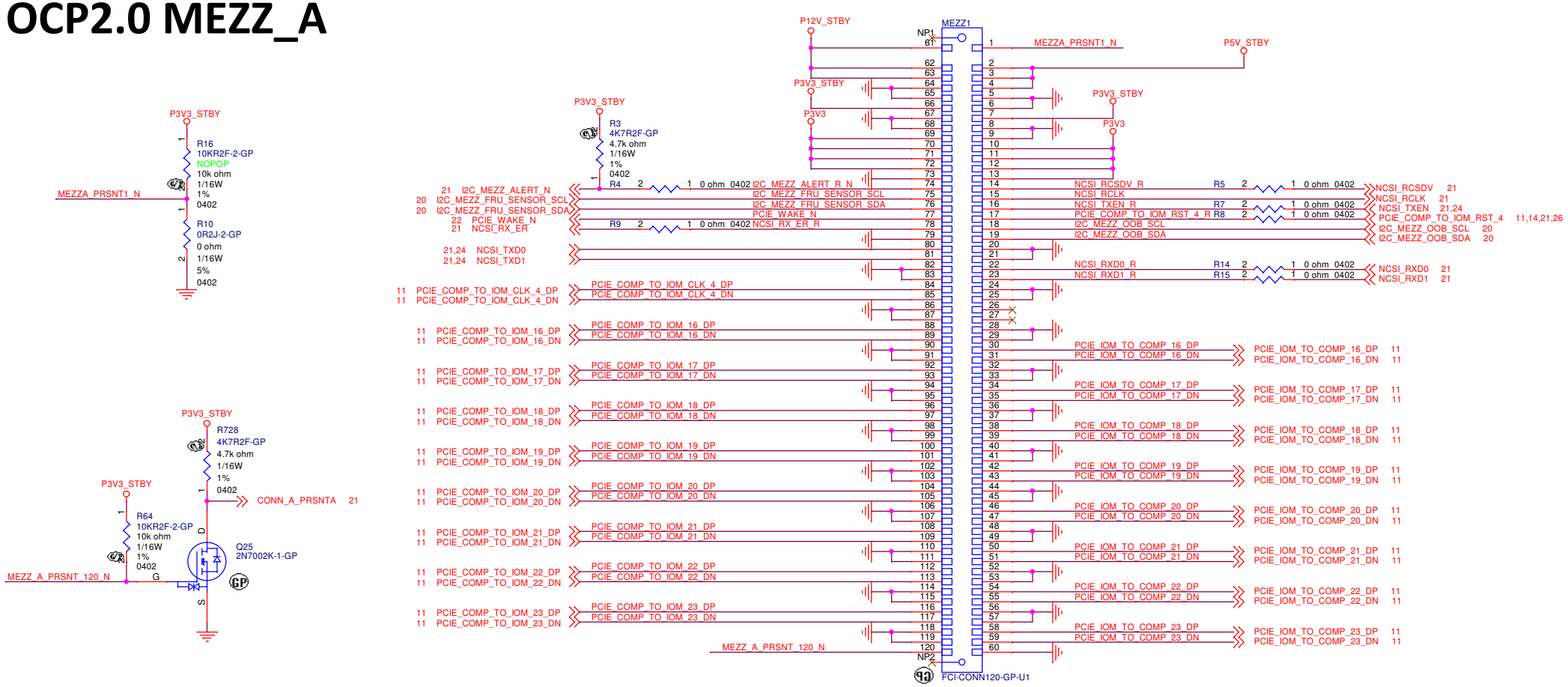

Bryce Canyon_IO Module
8F, 90, Sec.1, Xintai 5th Rd., Xizhi Dist., New Taipei City 22102, Taiwan (R.O.C.)
http://www.wiwynn.com

Title	OCP2.0_MEZZ CONN_A
Size A3	Document Number: Bryce Canyon_IO Module
Rev	2
Date:	Friday, December 08, 2017
Sheet	12 of 47

Bryce Canyon_IO Module
8F, 90, Sec.1, Xintai 5th Rd., Xizhi Dist.,
New Taipei City 22102, Taiwan (R.O.C.)
http://www.wiwynn.com

Title
RESERVE

Size	Document Number	Rev
A3	Bryce Canyon_IO Module	2

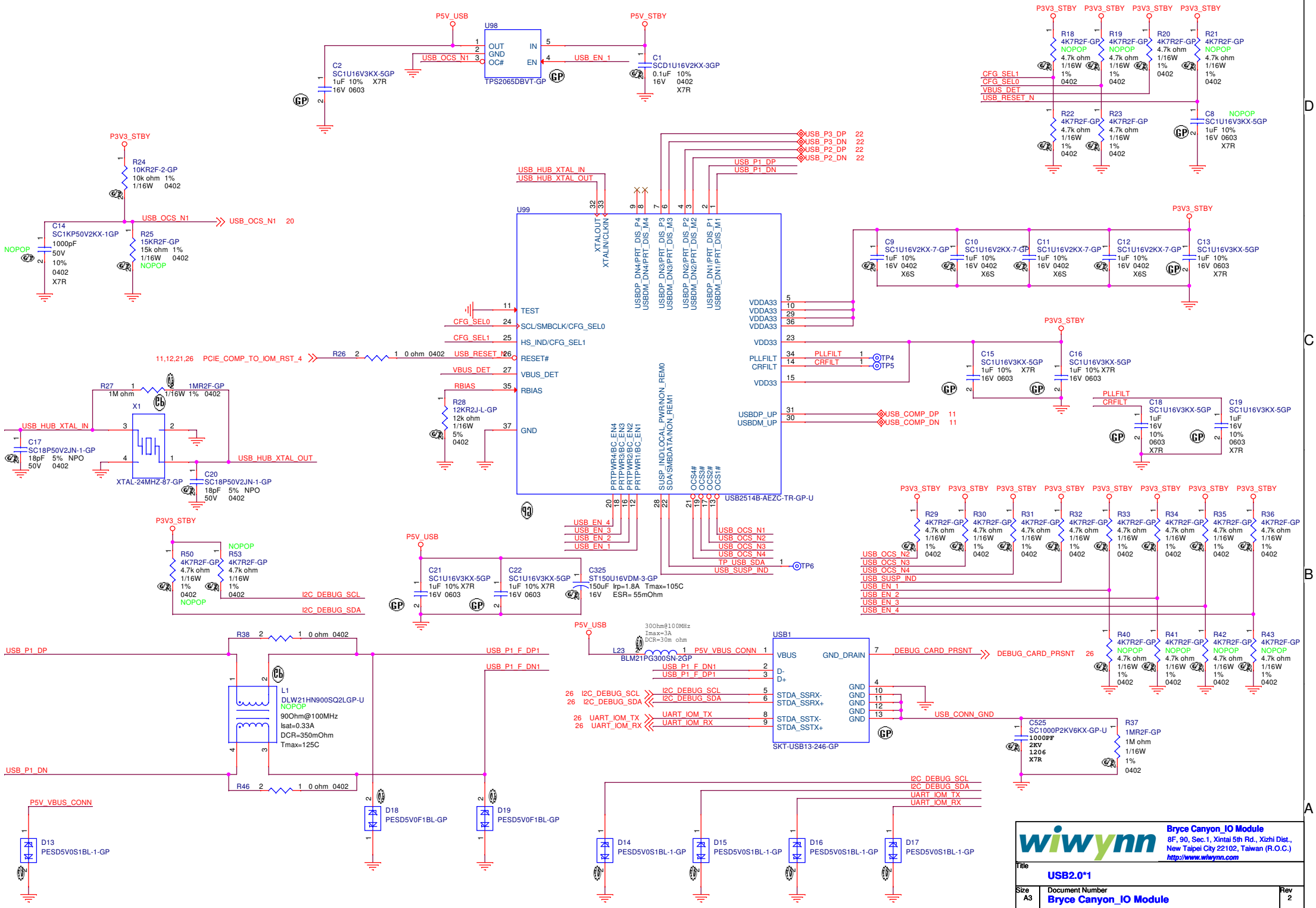

wiwynn

Bryce Canyon_IO Module
8F, 90, Sec.1, Xintai 5th Rd., Xizhi Dist., New Taipei City 22102, Taiwan (R.O.C.)
http://www.wiwynn.com

Title	USB2.0*1
Size	A3
Document Number	Bryce Canyon_IO Module
Rev	2
Date:	Friday, December 08, 2017
Sheet	14 of 47

POWER/RESET BUTTON

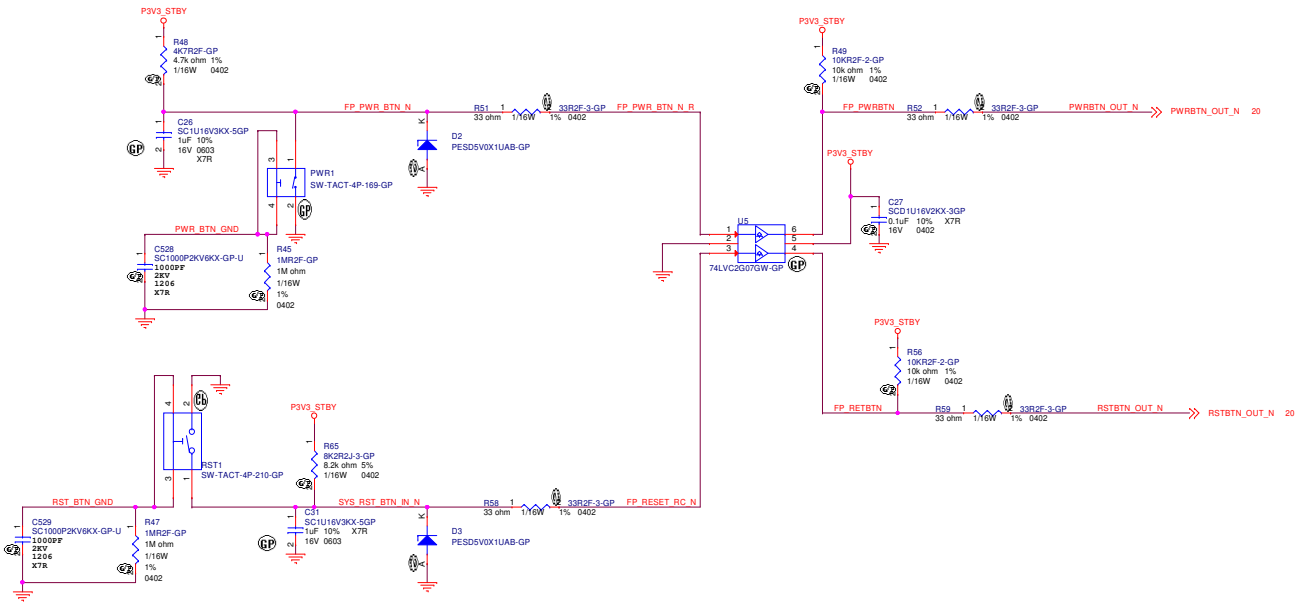

wiwynn	Bryce Canyon_IO Module 8F,90,Sec,1. Xintai 5th Rd.,Xizhi Dist., New Taipei City 22102, Taiwan(R.O.C) http://wiwynn.com	
Title	POWER & RESET BUTTON	
Size A2	Document Number Bryce Canyon_IO Module	Rev 2
Date: Friday, December 08, 2017	Sheet 15 of 47	

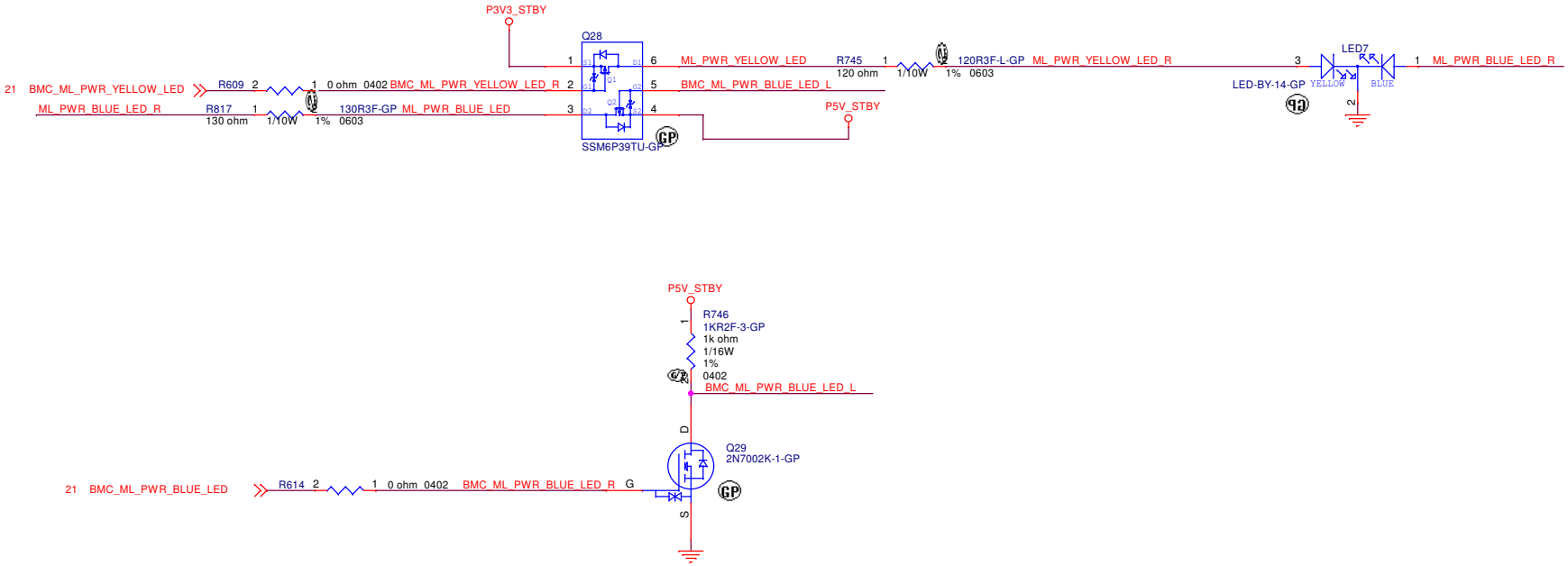

wiwynn	Bryce Canyon_IO Module 8F, 90, Sec.1, Xintai 5th Rd., Xizhi Dist., New Taipei City 22102, Taiwan (R.O.C.) http://www.wiwynn.com	
Title	RESERVE	
Size A3	Document Number Bryce Canyon_IO Module	Rev 2
Date: Thursday, August 03, 2017	Sheet 16 of 37	

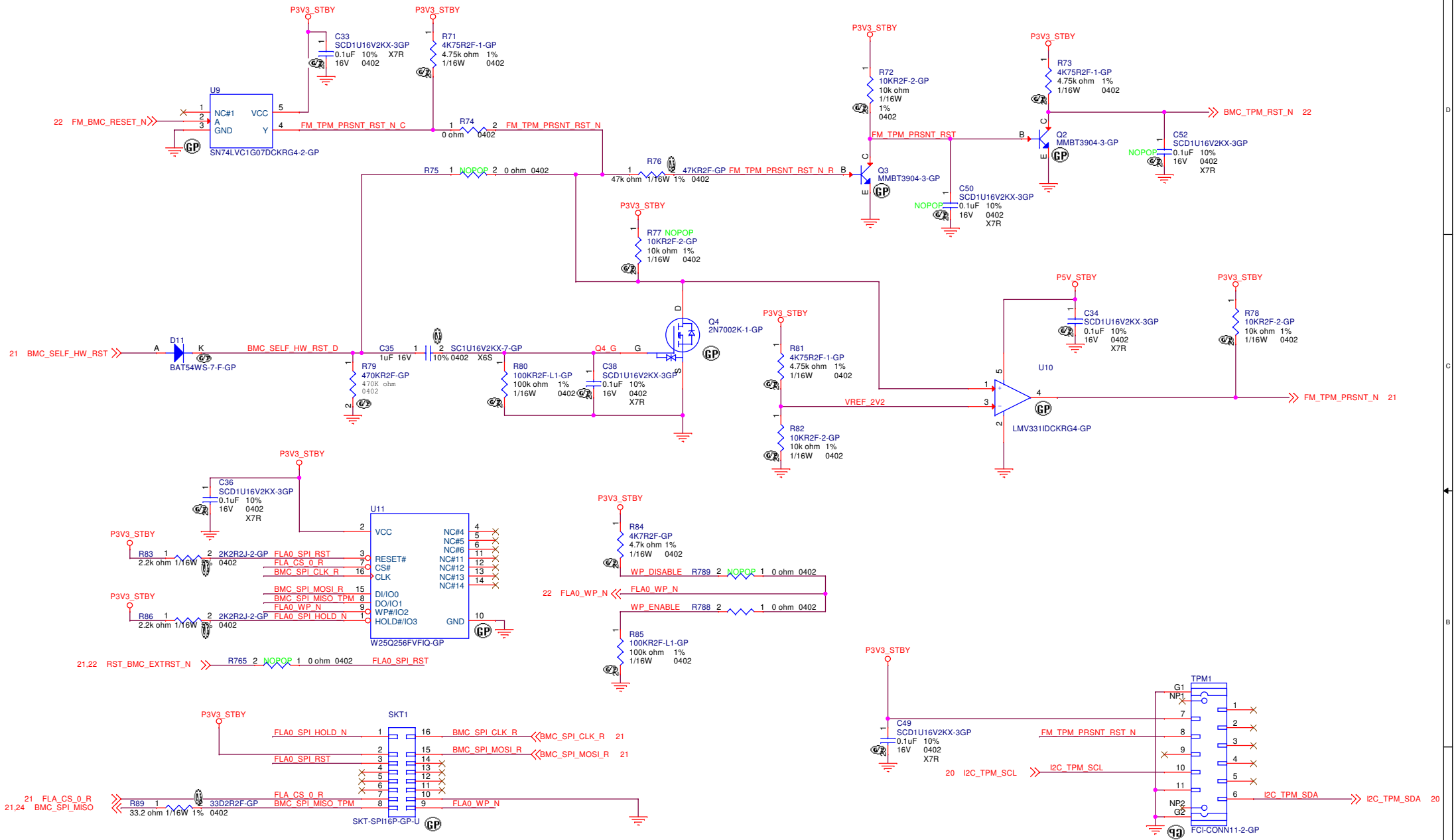

wiwynn

Bryce Canyon_IO Module
8F, 90, Sec.1, Xintai 5th Rd., Xizhi Dist., New Taipei City 22102, Taiwan (R.O.C.)
http://www.wiwynn.com

Title	POWER/ENCLOUSRE LED	
Size A3	Document Number Bryce Canyon_IO Module	Rev 2
Date: Friday, December 08, 2017	Sheet 17 of 47	

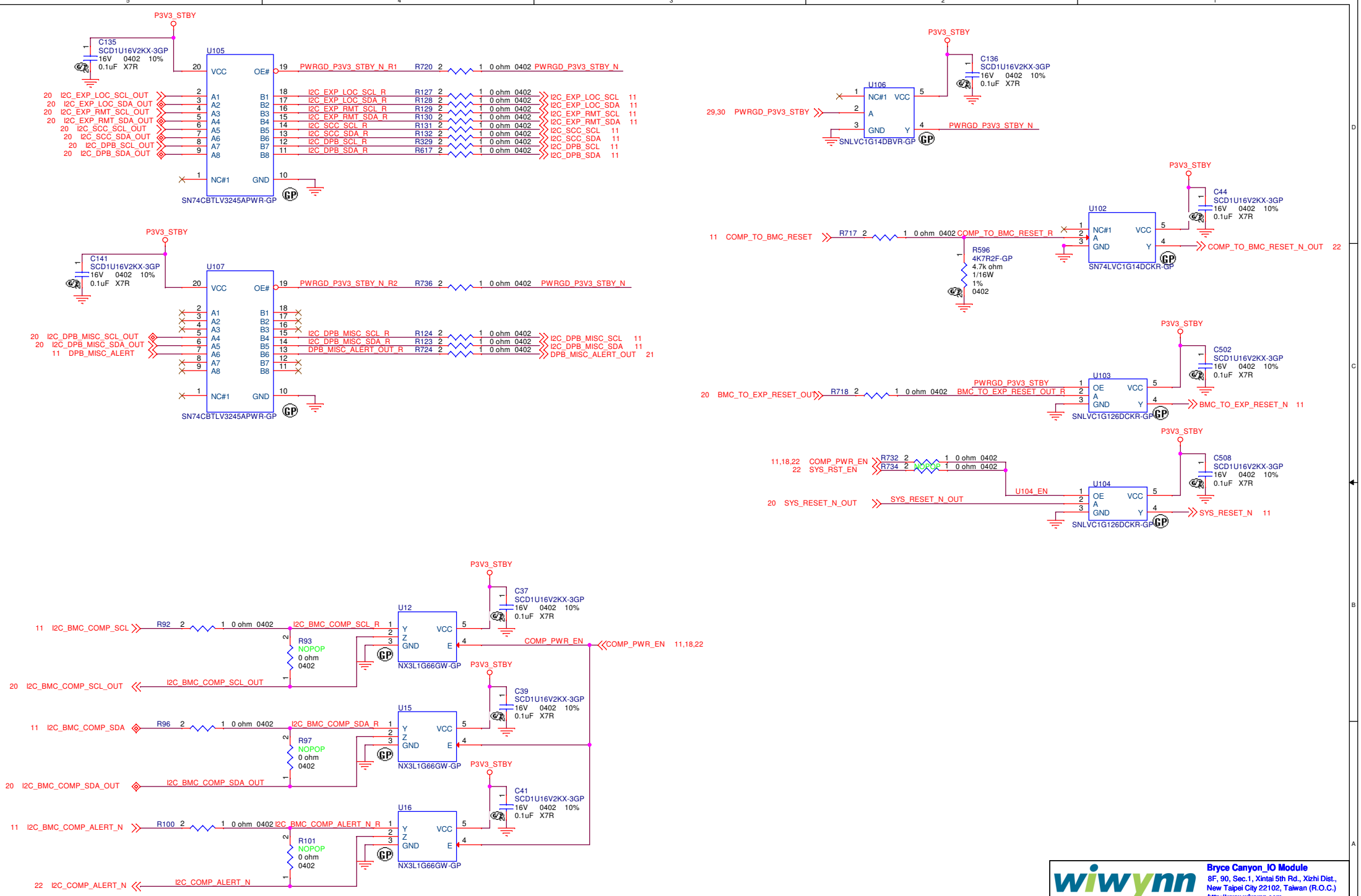

wiwynn

Bryce Canyon_IO Module
8F, 90, Sec.1, Xintai 5th Rd., Xizhi Dist.,
New Taipei City 22102, Taiwan (R.O.C.)
http://www.wiwynn.com

Title	I2C SWITCH & BUFFER
Size A3	Document Number: Bryce Canyon_IO Module
Rev	2
Date:	Friday, December 08, 2017
Sheet	18 of 47

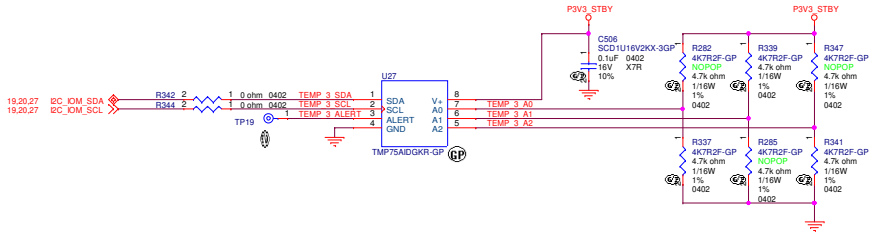

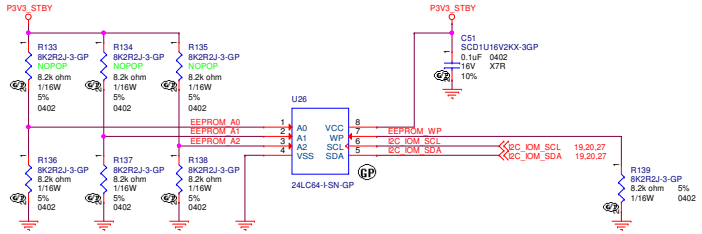

wiwynn

Bryce Canyon_IO Module
8F, 90, Sec.1, Xintai 5th Rd., Xizhi Dist.,
New Taipei City 22102, Taiwan (R.O.C.)
http://www.wiwynn.com

Title	I2C DEVICES	
Size A2	Document Number Bryce Canyon_IO Module	Rev 2
Date: Friday, December 08, 2017	Sheet 19 of 47	

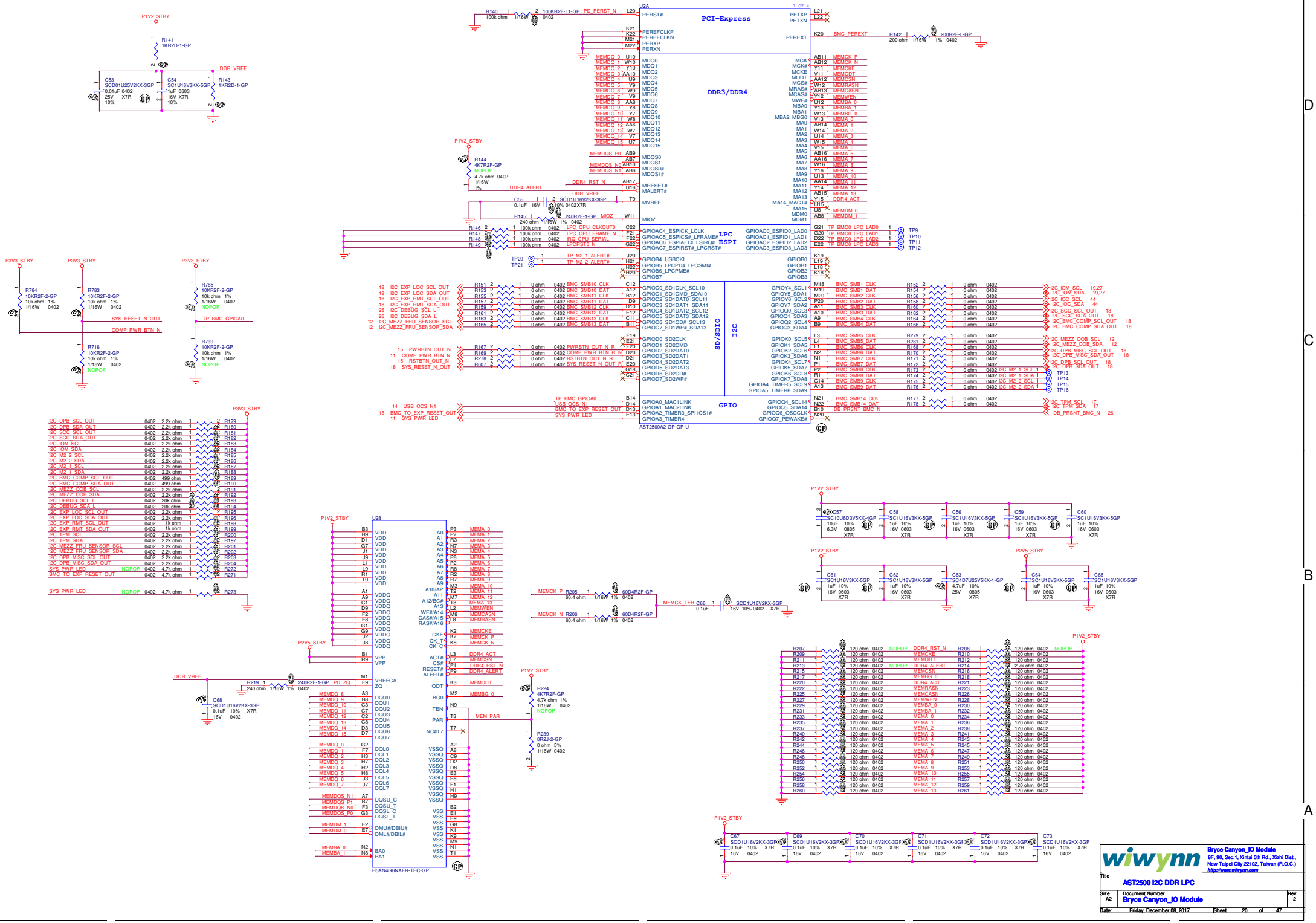
PCI-Express
DDR3/DDR4
LPC
ESPI
SD/SDIO
I2C
GPIO
AST2500A2-GP-GP-U
H5AN4G6NAFR-TFC-GP
P1V2_STBY
P3V3_STBY
P2V5_STBY
DDR_VREF
Bryce Canyon_IO Module
8F, 90, Sec.1, Xintai 5th Rd., Xizhi Dist.,
New Taipei City 22102, Taiwan (R.O.C.)
http://www.wiwynn.com
Title
AST2500 I2C DDR LPC
Size A2
Document Number
Bryce Canyon_IO Module
Rev 2
Date: Friday, December 08, 2017
Sheet 20 of 47

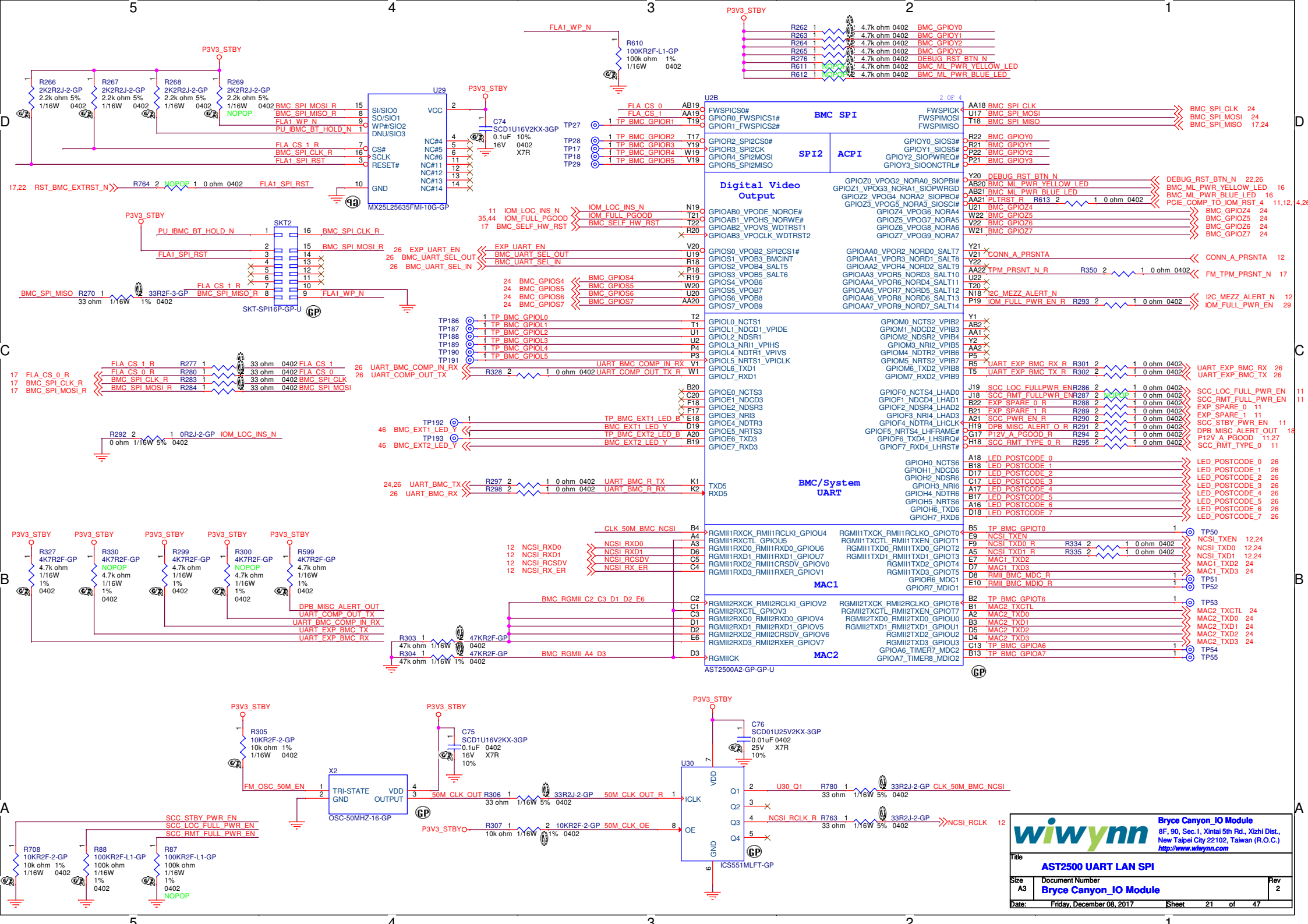
U29
MX25L25635FMI-10G-GP
U2B
2 OF 4
BMC SPI
SPI2
ACPI
Digital Video Output
BMC/System UART
MAC1
MAC2
AST2500A2-GP-GP-U
SKT2
SKT-SPI16P-GP-U
X2
OSC-50MHZ-16-GP
U30
ICS551MLFT-GP
P3V3_STBY
FLA1_WP_N
R610 100KR2F-L1-GP 100k ohm 1% 1/16W 0402
R266 2K2R2J-2-GP 2.2k ohm 5% 1/16W 0402
R267 2K2R2J-2-GP 2.2k ohm 5% 1/16W 0402
R268 2K2R2J-2-GP 2.2k ohm 5% 1/16W 0402
R269 2K2R2J-2-GP 2.2k ohm 5% 1/16W 0402 NOPOP
C74 SCD1U16V2KX-3GP 0.1uF 10% 16V 0402 X7R
R764 NOPOP 0 ohm 0402
R270 33R2F-3-GP 33 ohm 1/16W 1% 0402
R277 R280 R283 R284 33 ohm 0402
R292 0R2J-2-GP 0 ohm 1/16W 5% 0402
R297 R298 0 ohm 0402
R327 4K7R2F-GP 4.7k ohm 1/16W 1% 0402
R330 4K7R2F-GP NOPOP 4.7k ohm 1/16W 1% 0402
R299 4K7R2F-GP 4.7k ohm 1/16W 1% 0402
R300 4K7R2F-GP NOPOP 4.7k ohm 1/16W 1% 0402
R599 4K7R2F-GP 4.7k ohm 1/16W 1% 0402
R303 R304 47k ohm 1/16W 1% 0402 47KR2F-GP
R262 R263 R264 R265 R276 R611 R612 4.7k ohm 0402
R305 10KR2F-2-GP 10k ohm 1% 1/16W 0402
C75 SCD1U16V2KX-3GP 0.1uF 0402 16V X7R 10%
R306 33R2J-2-GP 33 ohm 1/16W 5% 0402
R307 10KR2F-2-GP 10k ohm 1% 1/16W 0402
C76 SCD01U25V2KX-3GP 0.01uF 0402 25V X7R 10%
R780 33R2J-2-GP 33 ohm 1/16W 5% 0402
R763 33R2J-2-GP 33 ohm 1/16W 5% 0402
R708 10KR2F-2-GP 10k ohm 1% 1/16W 0402
R88 100KR2F-L1-GP 100k ohm 1/16W 1% 0402
R87 100KR2F-L1-GP 100k ohm 1/16W 1% 0402 NOPOP
wiwynn
Bryce Canyon_IO Module
8F, 90, Sec.1, Xintai 5th Rd., Xizhi Dist., New Taipei City 22102, Taiwan (R.O.C.)
http://www.wiwynn.com
Title
AST2500 UART LAN SPI
Size A3
Document Number
Bryce Canyon_IO Module
Rev 2
Date: Friday, December 08, 2017
Sheet 21 of 47

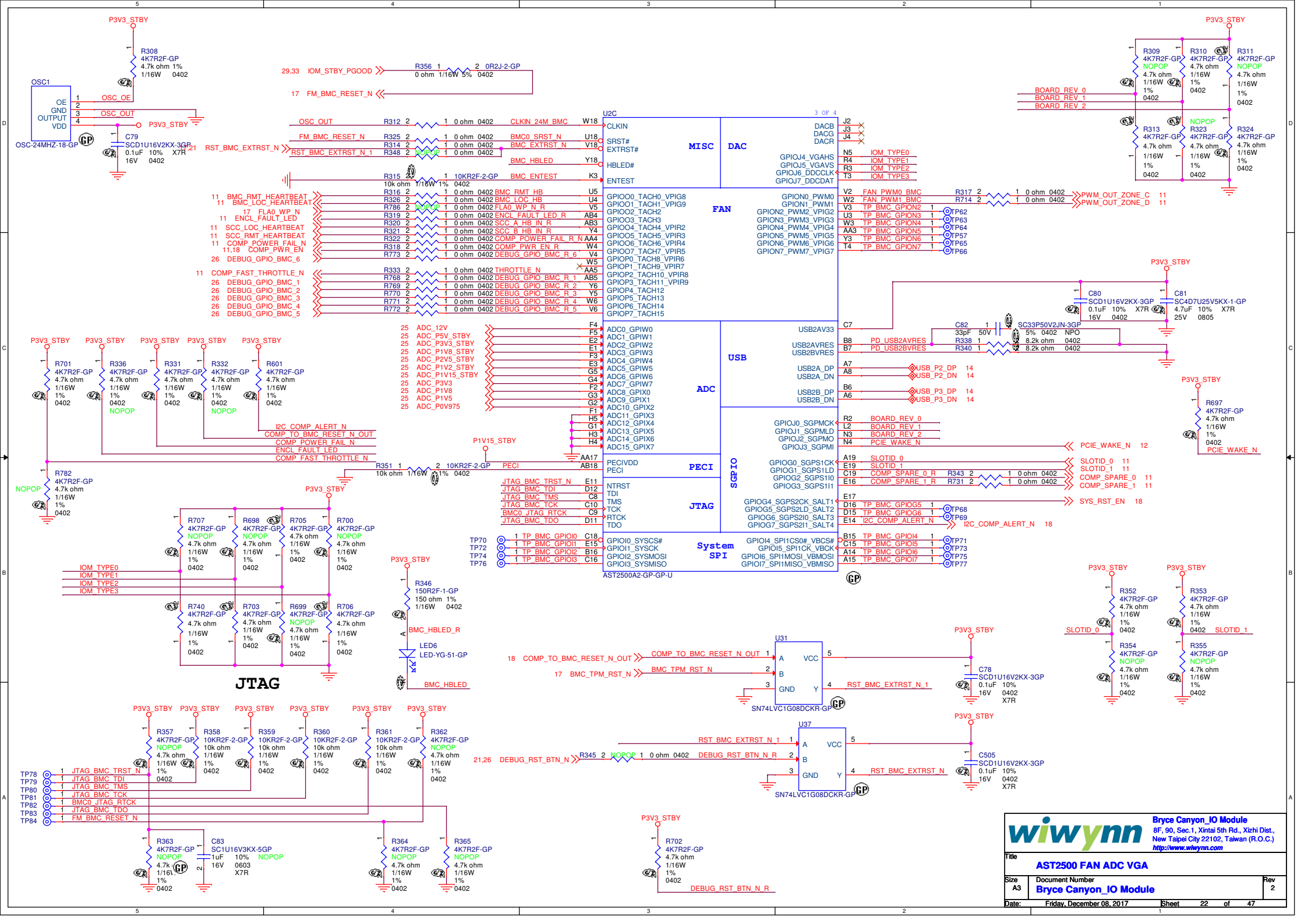
U2C
3 OF 4
MISC
DAC
FAN
USB
ADC
PECI
JTAG
SGPIO
System SPI
AST2500A2-GP-GP-U
OSC1
OSC-24MHZ-18-GP
U31
SN74LVC1G08DCKR-GP
U37
SN74LVC1G08DCKR-GP
JTAG
P3V3_STBY
P1V15_STBY
BOARD_REV_0
BOARD_REV_1
BOARD_REV_2
PCIE_WAKE_N
SLOTID_0
SLOTID_1
COMP_SPARE_0
COMP_SPARE_1
SYS_RST_EN
I2C_COMP_ALERT_N
PWM_OUT_ZONE_C
PWM_OUT_ZONE_D
IOM_TYPE0
IOM_TYPE1
IOM_TYPE2
IOM_TYPE3
BMC_HBLED_R
BMC_HBLED
LED6
LED-YG-51-GP
COMP_TO_BMC_RESET_N_OUT
BMC_TPM_RST_N
RST_BMC_EXTRST_N_1
RST_BMC_EXTRST_N
DEBUG_RST_BTN_N
DEBUG_RST_BTN_N_R
Bryce Canyon_IO Module
8F, 90, Sec.1, Xintai 5th Rd., Xizhi Dist.,
New Taipei City 22102, Taiwan (R.O.C.)
http://www.wiwynn.com
Title
AST2500 FAN ADC VGA
Size A3
Document Number
Bryce Canyon_IO Module
Rev 2
Date: Friday, December 08, 2017
Sheet 22 of 47

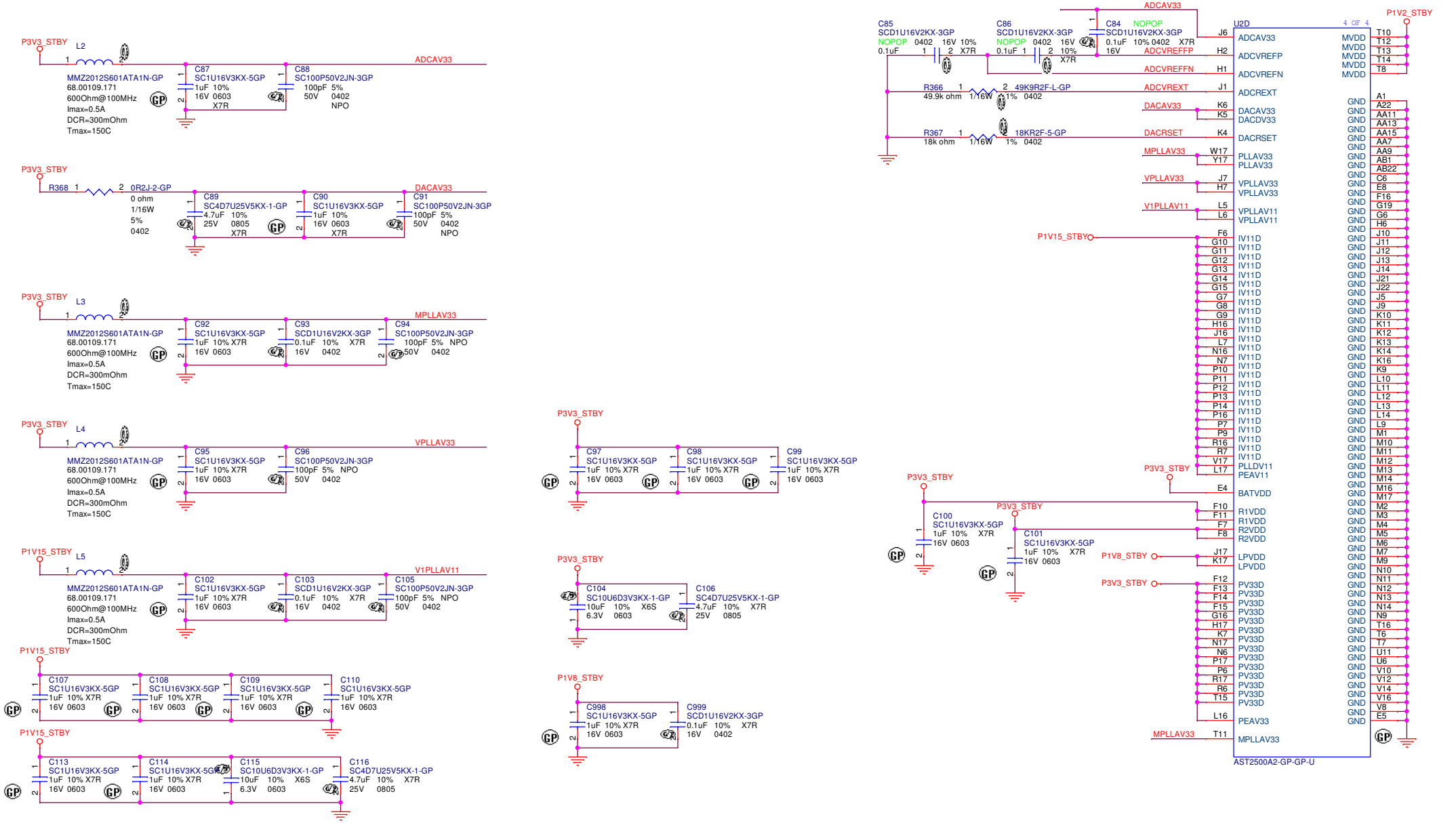

wiwynn

Bryce Canyon_IO Module
8F, 90, Sec.1, Xintai 5th Rd., Xizhi Dist.,
New Taipei City 22102, Taiwan (R.O.C.)
http://www.wiwynn.com

Title	AST2500 Power	
Size A3	Document Number Bryce Canyon_IO Module	Rev 2
Date: Friday, December 08, 2017	Sheet 23 of 47	

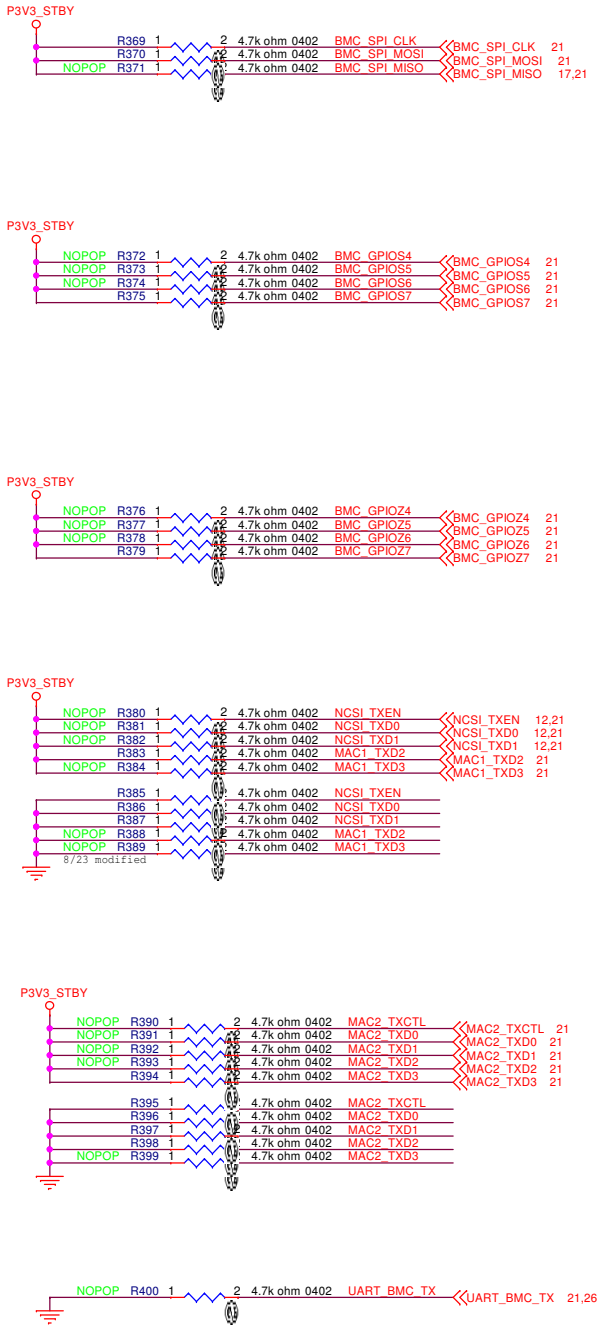

wiwynn
Bryce Canyon_IO Module
8F, 90, Sec.1, Xintai 5th Rd., Xizhi Dist.,
New Taipei City 22102, Taiwan (R.O.C.)
http://www.wiwynn.com

Title	AST2500 STRAPPING	
Size A3	Document Number Bryce Canyon_IO Module	Rev 2
Date: Friday, December 08, 2017	Sheet 24 of 47	

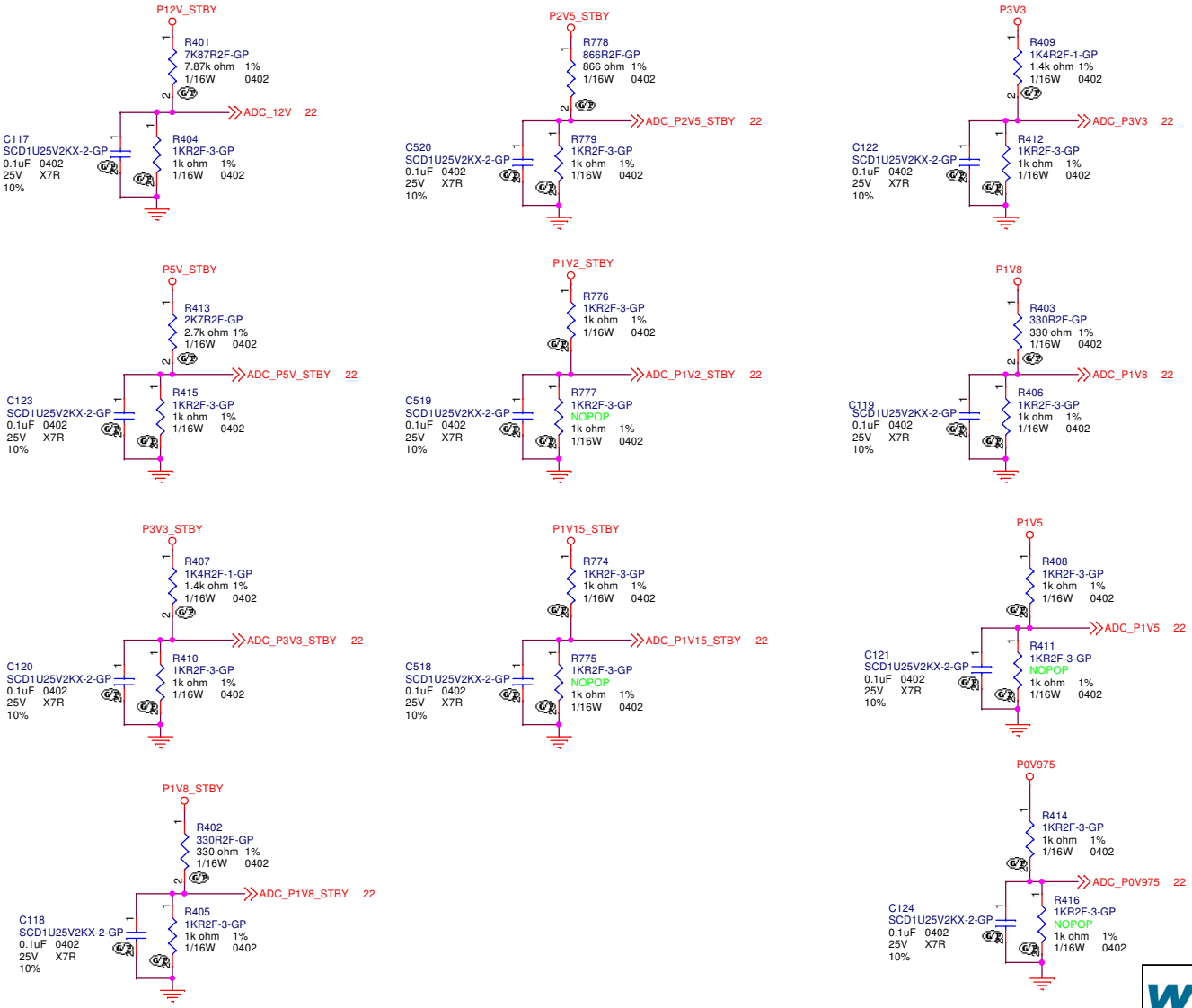

wiwynn

Bryce Canyon_IO Module
8F, 90, Sec.1, Xintai 5th Rd., Xizhi Dist.,
New Taipei City 22102, Taiwan (R.O.C.)
http://www.wiwynn.com

Title: AST2500 VOLTAGE SENSE

Size: A3 | Document Number: Bryce Canyon_IO Module | Rev: 2

Date: Friday, December 08, 2017 | Sheet 25 of 47

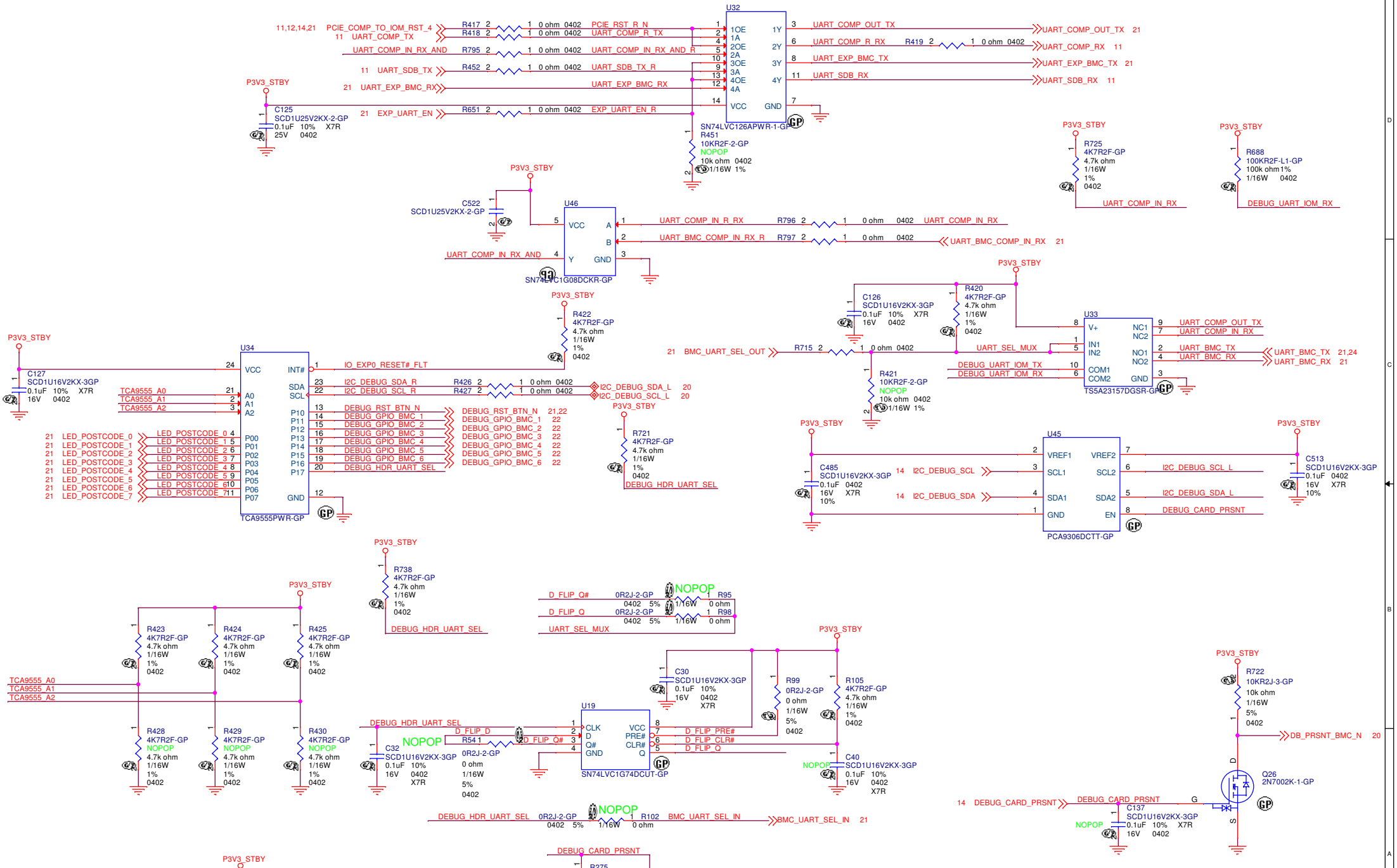
U32
SN74LVC126APWR-1-GP
PCIE_COMP_TO_IOM_RST_4
UART_COMP_TX
UART_COMP_IN_RX_AND
UART_SDB_TX
UART_EXP_BMC_RX
EXP_UART_EN
UART_COMP_OUT_TX
UART_COMP_R_RX
UART_EXP_BMC_TX
UART_SDB_RX
UART_COMP_RX
UART_EXP_BMC_TX
UART_SDB_RX
R451
10KR2F-2-GP
NOPOP
10k ohm 0402
1/16W 1%
P3V3_STBY
C125
SCD1U25V2KX-2-GP
0.1uF 10% X7R
25V 0402
R725
4K7R2F-GP
4.7k ohm
1/16W
1%
0402
UART_COMP_IN_RX
R688
100KR2F-L1-GP
100k ohm 1%
1/16W 0402
DEBUG_UART_IOM_RX
C522
SCD1U25V2KX-2-GP
U46
SN74LVC1G08DCKR-GP
UART_COMP_IN_R_RX
UART_BMC_COMP_IN_RX_R
UART_BMC_COMP_IN_RX
U33
TS5A23157DGSR-GP
BMC_UART_SEL_OUT
UART_SEL_MUX
DEBUG_UART_IOM_TX
DEBUG_UART_IOM_RX
UART_BMC_TX
UART_BMC_RX
C126
SCD1U16V2KX-3GP
0.1uF 10% X7R
16V 0402
R420
4K7R2F-GP
4.7k ohm
1/16W
1%
0402
R421
10KR2F-2-GP
NOPOP
10k ohm 0402
1/16W 1%
U34
TCA9555PWR-GP
C127
SCD1U16V2KX-3GP
0.1uF 10% X7R
16V 0402
IO_EXP0_RESET#_FLT
I2C_DEBUG_SDA_R
I2C_DEBUG_SCL_R
I2C_DEBUG_SDA_L
I2C_DEBUG_SCL_L
DEBUG_RST_BTN_N
DEBUG_GPIO_BMC_1
DEBUG_GPIO_BMC_2
DEBUG_GPIO_BMC_3
DEBUG_GPIO_BMC_4
DEBUG_GPIO_BMC_5
DEBUG_GPIO_BMC_6
DEBUG_HDR_UART_SEL
LED_POSTCODE_0
LED_POSTCODE_1
LED_POSTCODE_2
LED_POSTCODE_3
LED_POSTCODE_4
LED_POSTCODE_5
LED_POSTCODE_6
LED_POSTCODE_7
TCA9555_A0
TCA9555_A1
TCA9555_A2
R422
4K7R2F-GP
4.7k ohm
1/16W
1%
0402
R721
4K7R2F-GP
4.7k ohm
1/16W
1%
0402
U45
PCA9306DCTT-GP
C485
SCD1U16V2KX-3GP
0.1uF 0402
16V X7R
10%
C513
SCD1U16V2KX-3GP
0.1uF 0402
16V X7R
10%
I2C_DEBUG_SCL
I2C_DEBUG_SDA
DEBUG_CARD_PRSNT
R738
4K7R2F-GP
4.7k ohm
1/16W
1%
0402
D_FLIP_Q#
D_FLIP_Q
R95
R98
R423
R424
R425
R428
R429
R430
4K7R2F-GP
NOPOP
4.7k ohm
1/16W
1%
0402
U19
SN74LVC1G74DCUT-GP
C30
SCD1U16V2KX-3GP
0.1uF 10%
16V 0402
X7R
R99
0R2J-2-GP
0 ohm
1/16W
5%
0402
R105
4K7R2F-GP
4.7k ohm
1/16W
1%
0402
C32
SCD1U16V2KX-3GP
0.1uF 10%
16V 0402
X7R
R541
0R2J-2-GP
0 ohm
1/16W
5%
0402
C40
SCD1U16V2KX-3GP
0.1uF 10%
16V 0402
X7R
D_FLIP_PRE#
D_FLIP_CLR#
D_FLIP_D
R102
BMC_UART_SEL_IN
R722
10KR2J-3-GP
10k ohm
1/16W
5%
0402
DB_PRSNT_BMC_N
Q26
2N7002K-1-GP
C137
SCD1U16V2KX-3GP
0.1uF 10% X7R
16V 0402
U100
SNLVC1G126DCKR-GP
C503
SCD1U16V2KX-3GP
0.1uF 10% X7R
16V 0402
UART_IOM_TX
R275
100KR2F-L1-GP
100k ohm 1%
1/16W 0402
U101
SNLVC1G126DCKR-GP
UART_IOM_RX
C504
SCD1U16V2KX-3GP
0.1uF 10% X7R
16V 0402
wiwynn
Bryce Canyon_IO Module
8F, 90, Sec.1, Xintai 5th Rd., Xizhi Dist.,
New Taipei City 22102, Taiwan (R.O.C.)
http://www.wiwynn.com
Title
DEBUG PORT
Size A3
Document Number
Bryce Canyon_IO Module
Rev 2
Date: Friday, December 08, 2017
Sheet 26 of 47

Controller : ADM1278
TDC :6.15A
OCP :9.12A

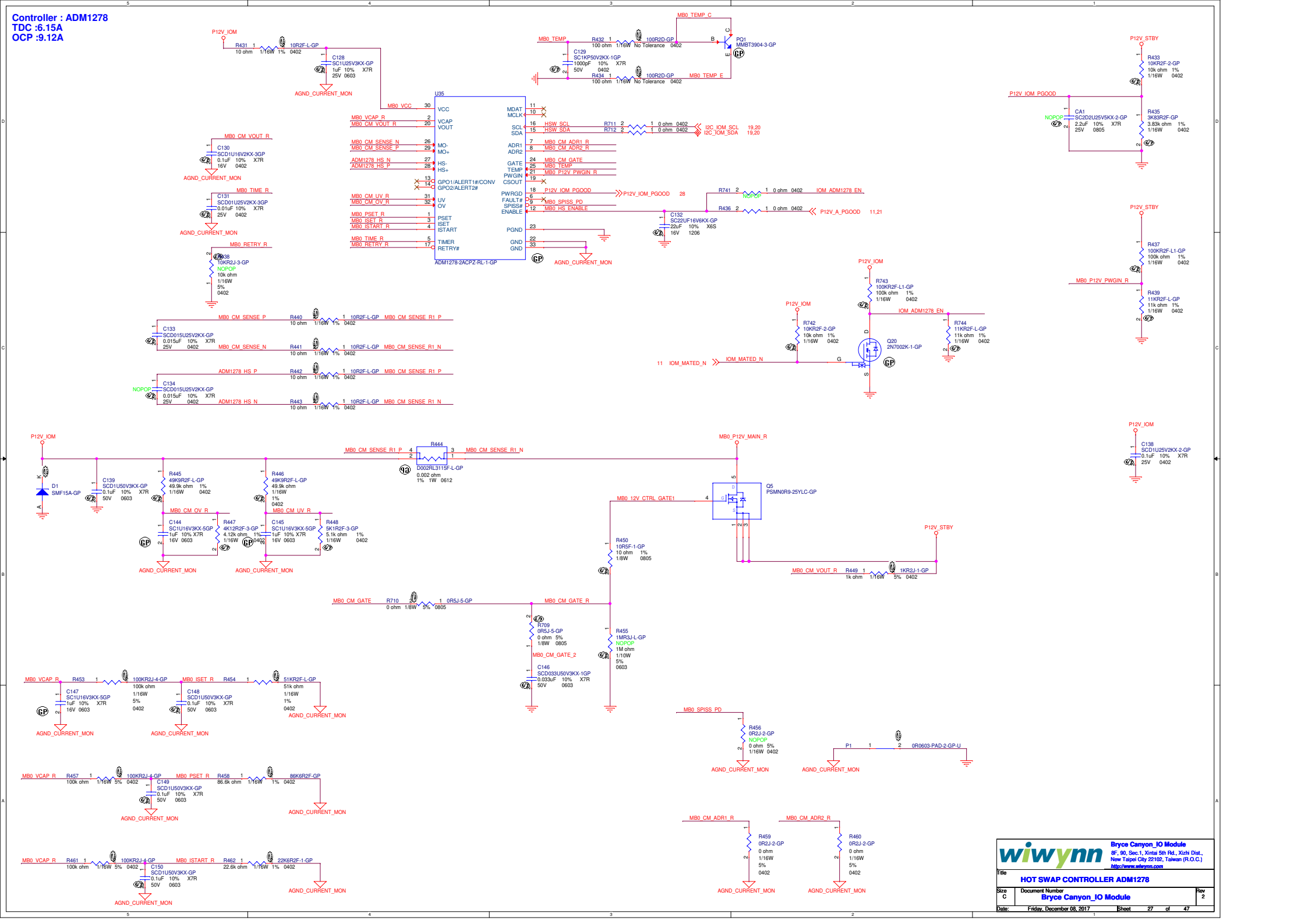

wiwynn
Bryce Canyon_IO Module
8F, 90, Sec.1, Xintai 5th Rd., Xizhi Dist., New Taipei City 22102, Taiwan (R.O.C.)
http://www.wiwynn.com

Title	HOT SWAP CONTROLLER ADM1278	
Size C	Document Number Bryce Canyon_IO Module	Rev 2
Date: Friday, December 08, 2017	Sheet 27 of 47	

Power rail : P5V_STBY
Controller : TPS53318 (Fswitching=500KHz)
TDC : 3.4A
MAX : 3.4A
OCP : 5.1A

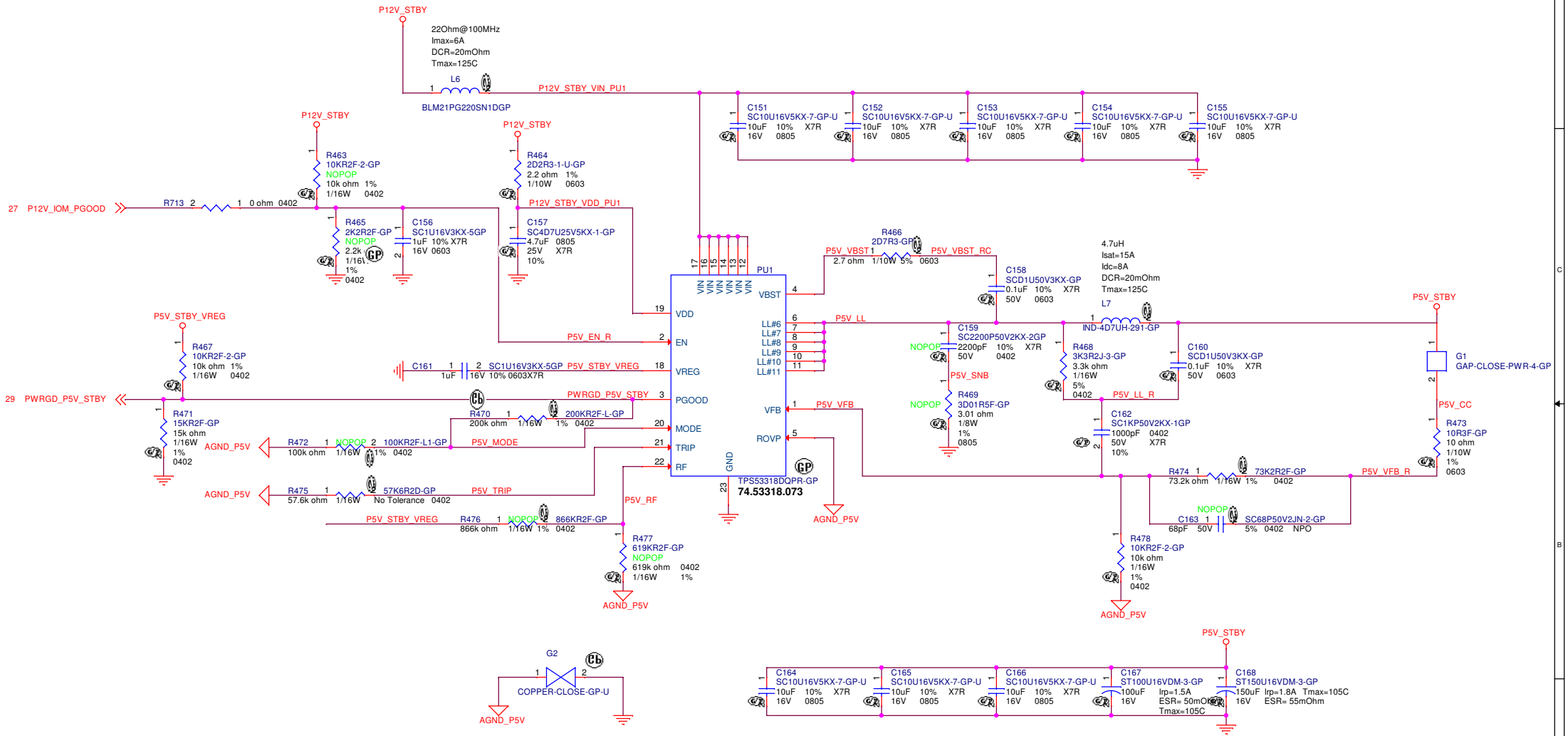

wiwynn

Bryce Canyon_IO Module
8F, 90, Sec.1, Xintai 5th Rd., Xizhi Dist., New Taipei, Taiwan
http://www.wiwynn.com

Title	PWRSW_P5V_STBY_TPS53319
Size	A3
Document Number	Bryce Canyon_IO Module
Rev	2
Date:	Friday, December 08, 2017
Sheet	28 of 47

Power rail : P3V3_STBY
Controller : TPS53318 (Fswitching=500KHz)
TDC : 3A
MAX : 3A
OCP : 5.3A

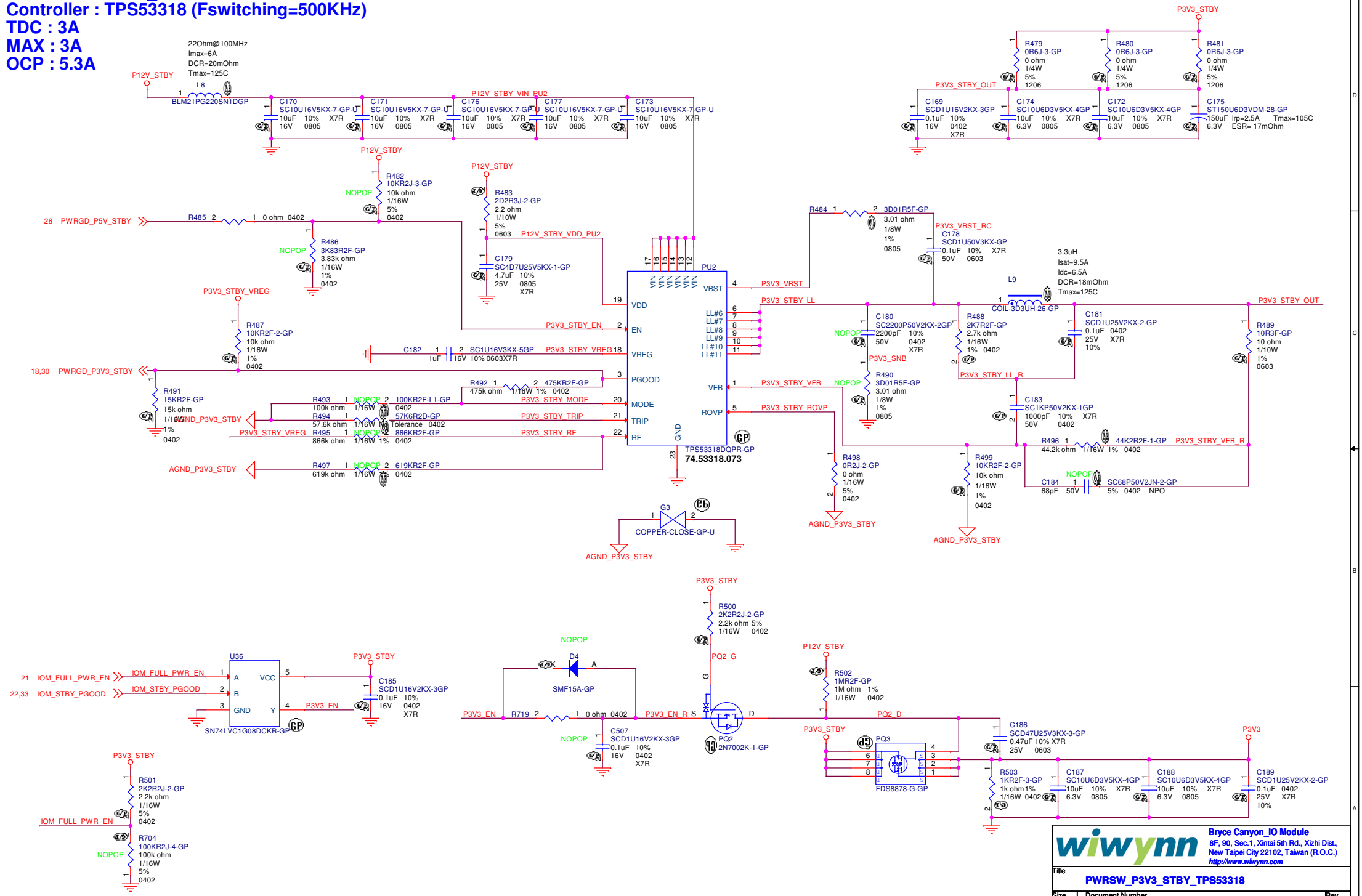

wiwynn

Bryce Canyon_IO Module
8F, 90, Sec.1, Xintai 5th Rd., Xizhi Dist., New Taipei City 22102, Taiwan (R.O.C.)
http://www.wiwynn.com

Title	PWRSW_P3V3_STBY_TPS53318	
Size A3	Document Number Bryce Canyon_IO Module	Rev 2
Date: Friday, December 08, 2017	Sheet 29 of 47	

Power rail :P2V5_STBY(2.5V)
Controller :TPS74801
TDC :0.2A
Max :0.2A
OCP:2A

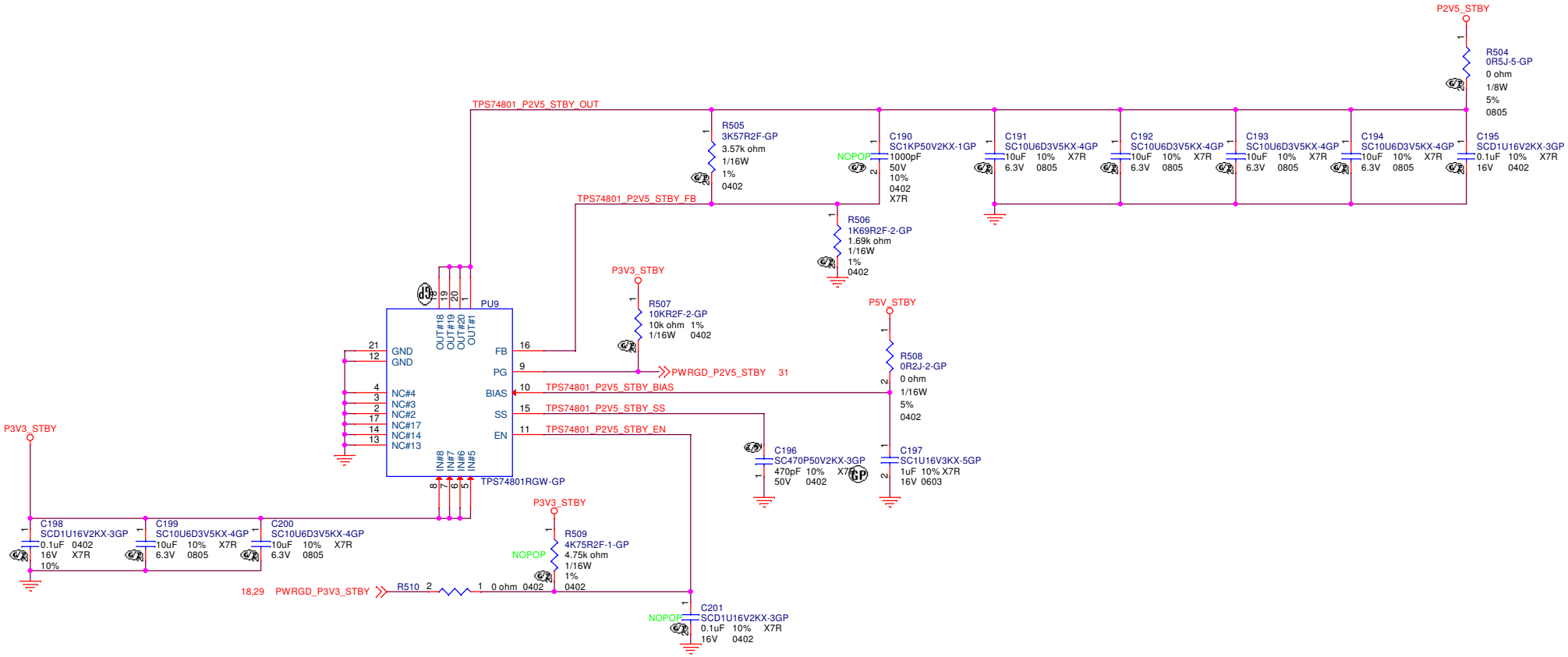

wiwynn	Bryce Canyon_IO Module 8F, 90, Sec.1, Xintai 5th Rd., Xizhi Dist., New Taipei City 22102, Taiwan (R.O.C.) http://www.wiwynn.com	
Title	PWRLDO_P2V5_STBY_TPS74801	
Size A3	Document Number Bryce Canyon_IO Module	Rev 2
Date: Friday, December 08, 2017	Sheet 30 of 47	

Power rail : P1V8_STBY
Controller : TPS53312(Fswitching=700KHz)
TDC : 2.178A
MAX : 2.178A
OCP : 4.1A

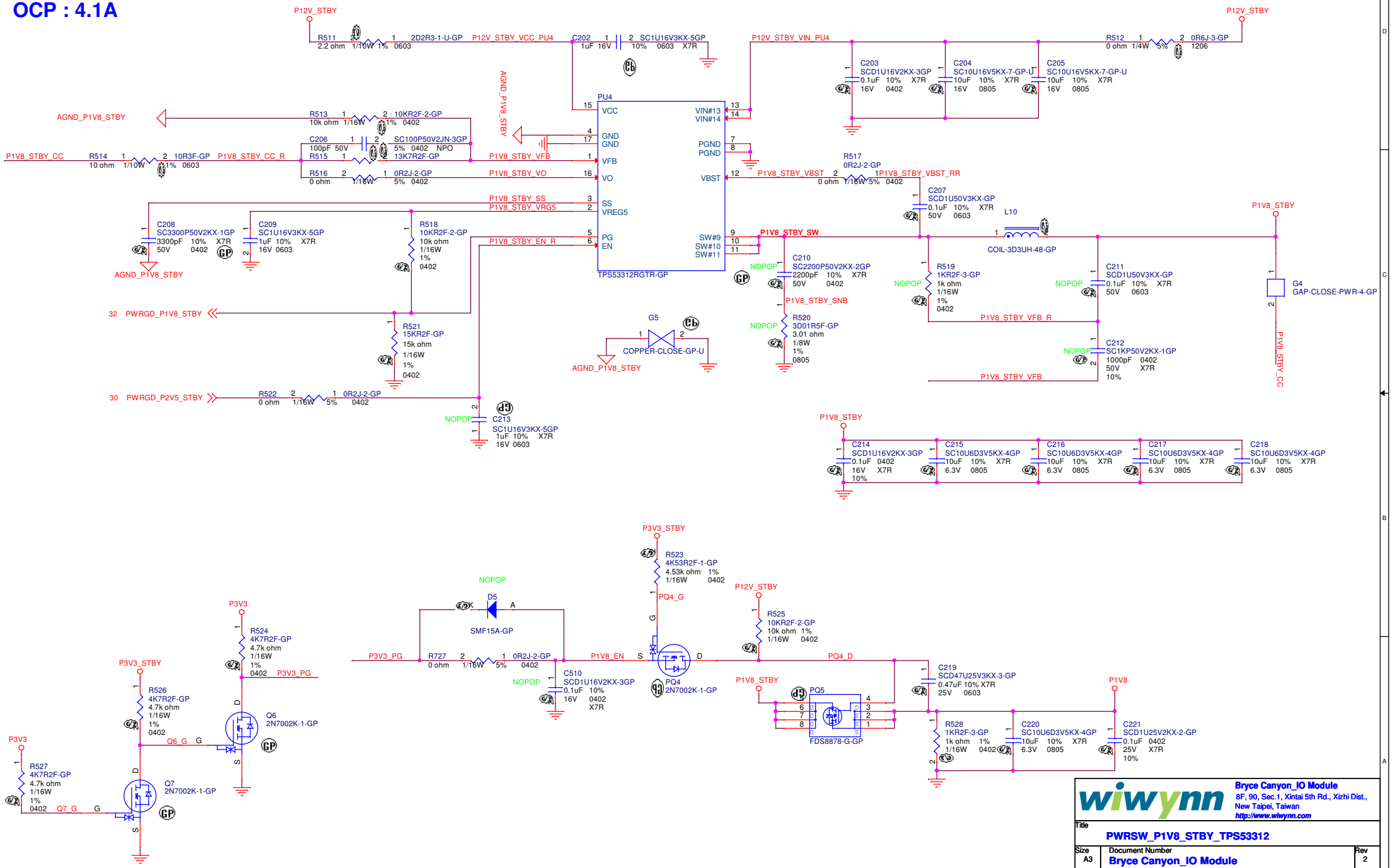

wiwynn

Bryce Canyon_IO Module
8F, 90, Sec.1, Xintai 5th Rd., Xizhi Dist., New Taipei, Taiwan
http://www.wiwynn.com

Title	PWRSW_P1V8_STBY_TPS53312
Size A3	Document Number: Bryce Canyon_IO Module
Rev	2
Date:	Friday, December 08, 2017
Sheet	31 of 47

Power rail :P1V2_STBY(1.2V)
Controller :TPS74801
TDC :0.495A
Max :0.495A
OCP:2A

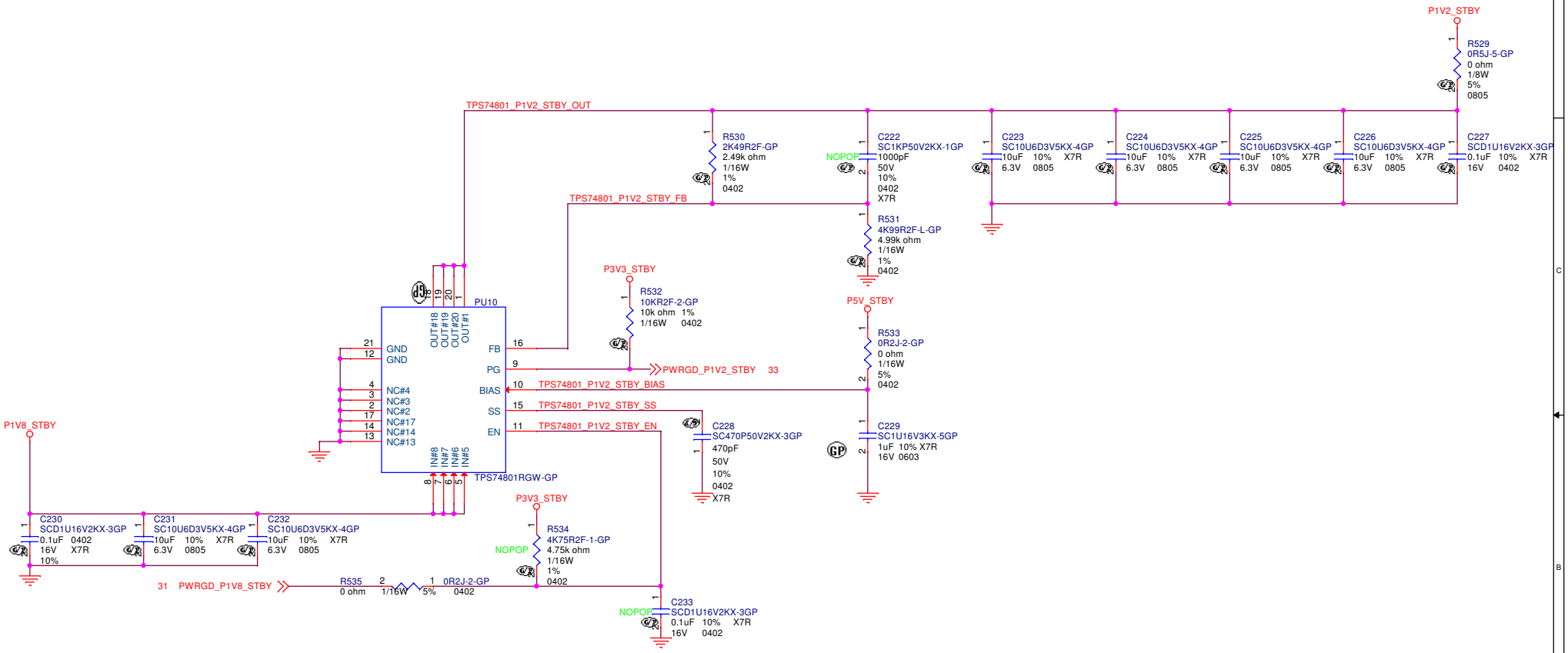

wiwynn

Bryce Canyon_IO Module
8F, 90, Sec.1, Xintai 5th Rd., Xizhi Dist.,
New Taipei City 22102, Taiwan (R.O.C.)
http://www.wiwynn.com

Title	PWRLDO_P1V2_STBY_TPS74801
Size A3	Document Number: Bryce Canyon_IO Module
Rev	2
Date:	Friday, December 08, 2017
Sheet	32 of 47

Power rail :P1V15_STBY(1.15V)
Controller :TPS74801
TDC :0.663A
Max :0.663A
OCP:2A

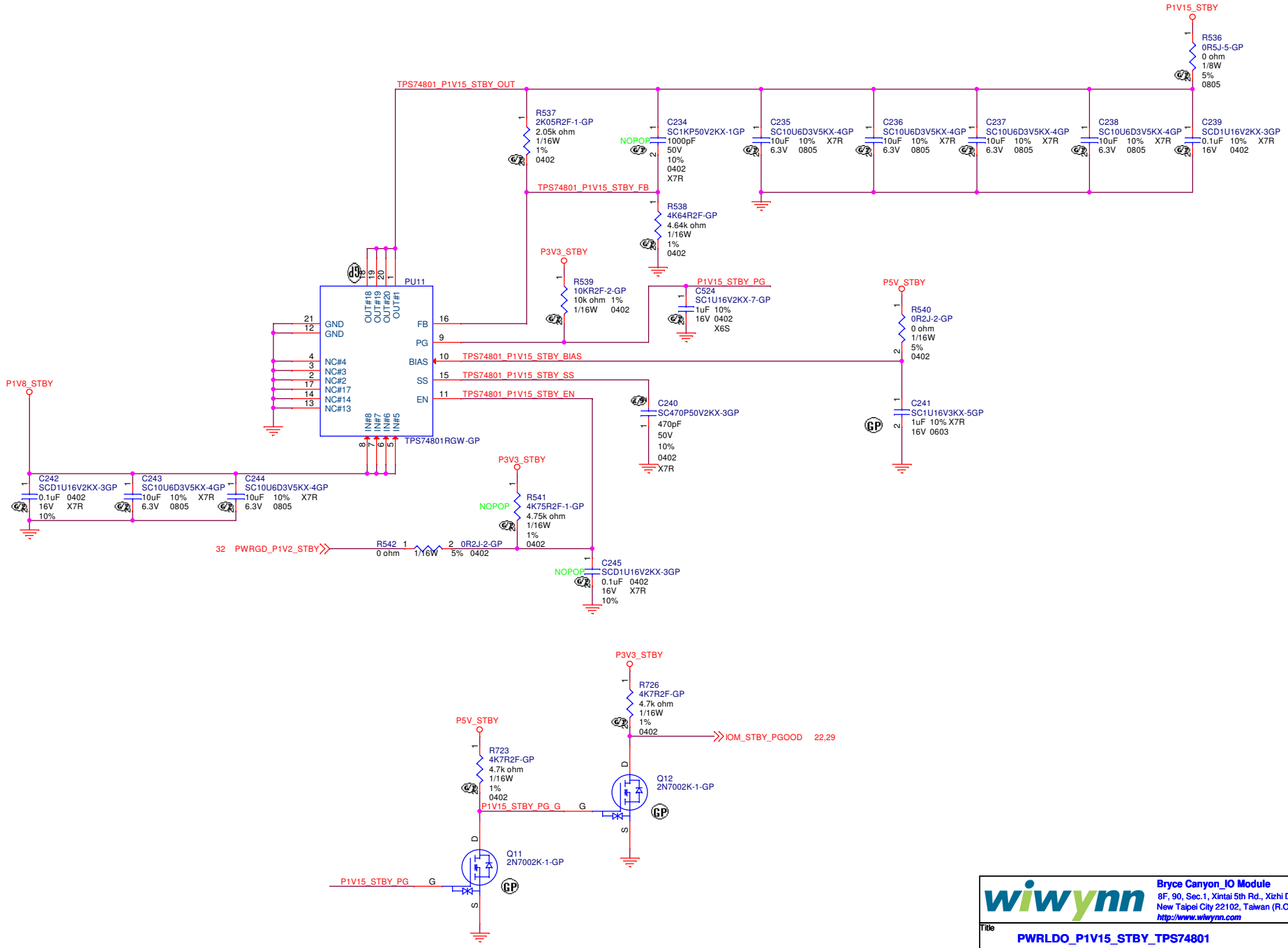

wiwynn

Bryce Canyon_IO Module
8F, 90, Sec.1, Xintai 5th Rd., Xizhi Dist.,
New Taipei City 22102, Taiwan (R.O.C.)
http://www.wiwynn.com

Title	PWRLDO_P1V15_STBY_TPS74801	
Size A3	Document Number Bryce Canyon_IO Module	Rev 2
Date: Friday, December 08, 2017	Sheet 33 of 47	

Power rail :P1V5(1.5V)
Controller :TPS74801
TDC :0.36A
Max :0.36A
OCP:2A

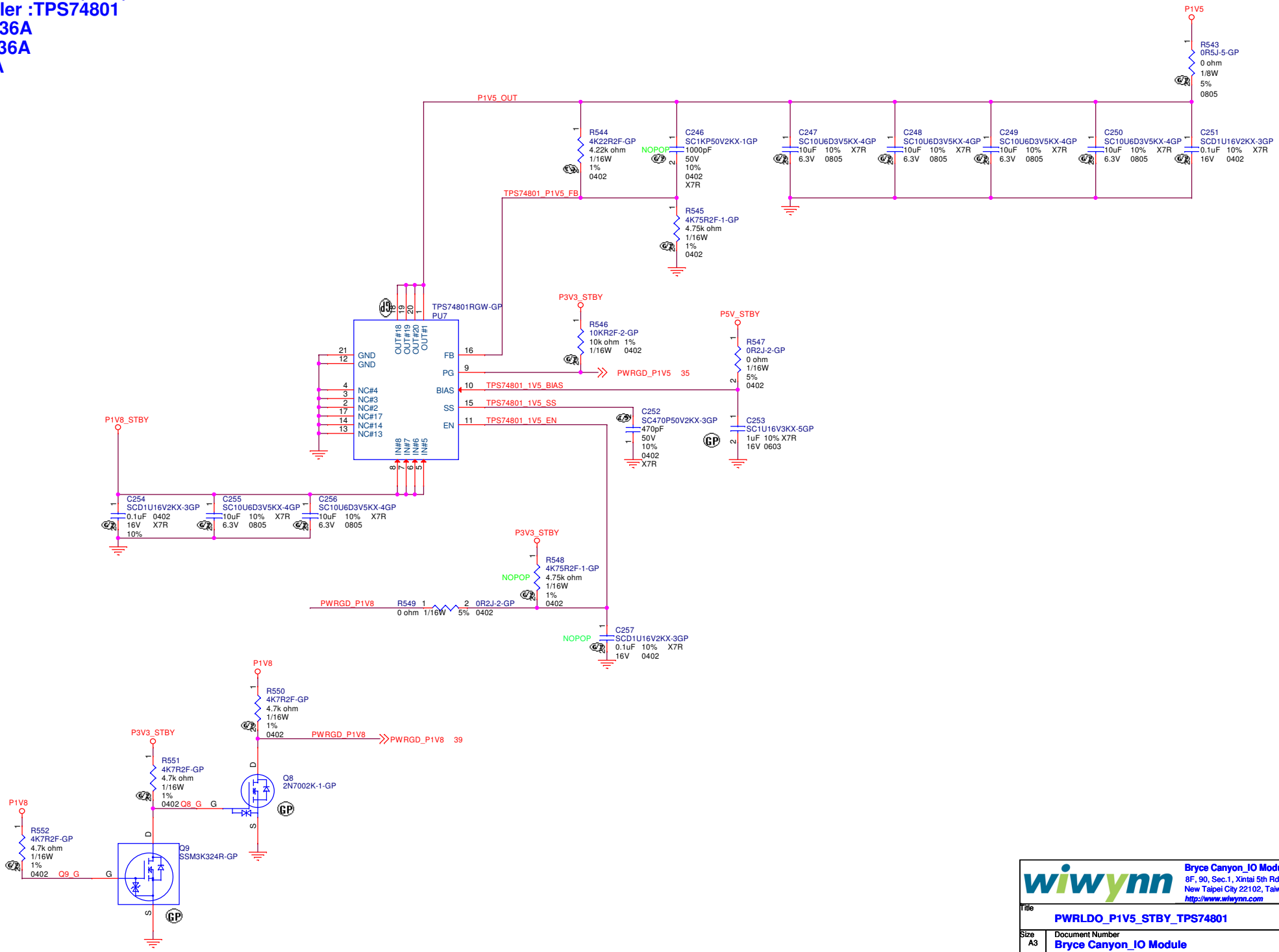

wiwynn

Bryce Canyon_IO Module
8F, 90, Sec.1, Xintai 5th Rd., Xizhi Dist., New Taipei City 22102, Taiwan (R.O.C.)
http://www.wiwynn.com

Title	PWRLDO_P1V5_STBY_TPS74801	
Size A3	Document Number Bryce Canyon_IO Module	Rev 2
Date: Friday, December 08, 2017	Sheet 34 of 47	

Power rail :P0V975(0.975V)
Controller :VT235WFQX
Fswitch= 300KHz
TDC : 14.37A
Max : 14.37A
OCP :20A

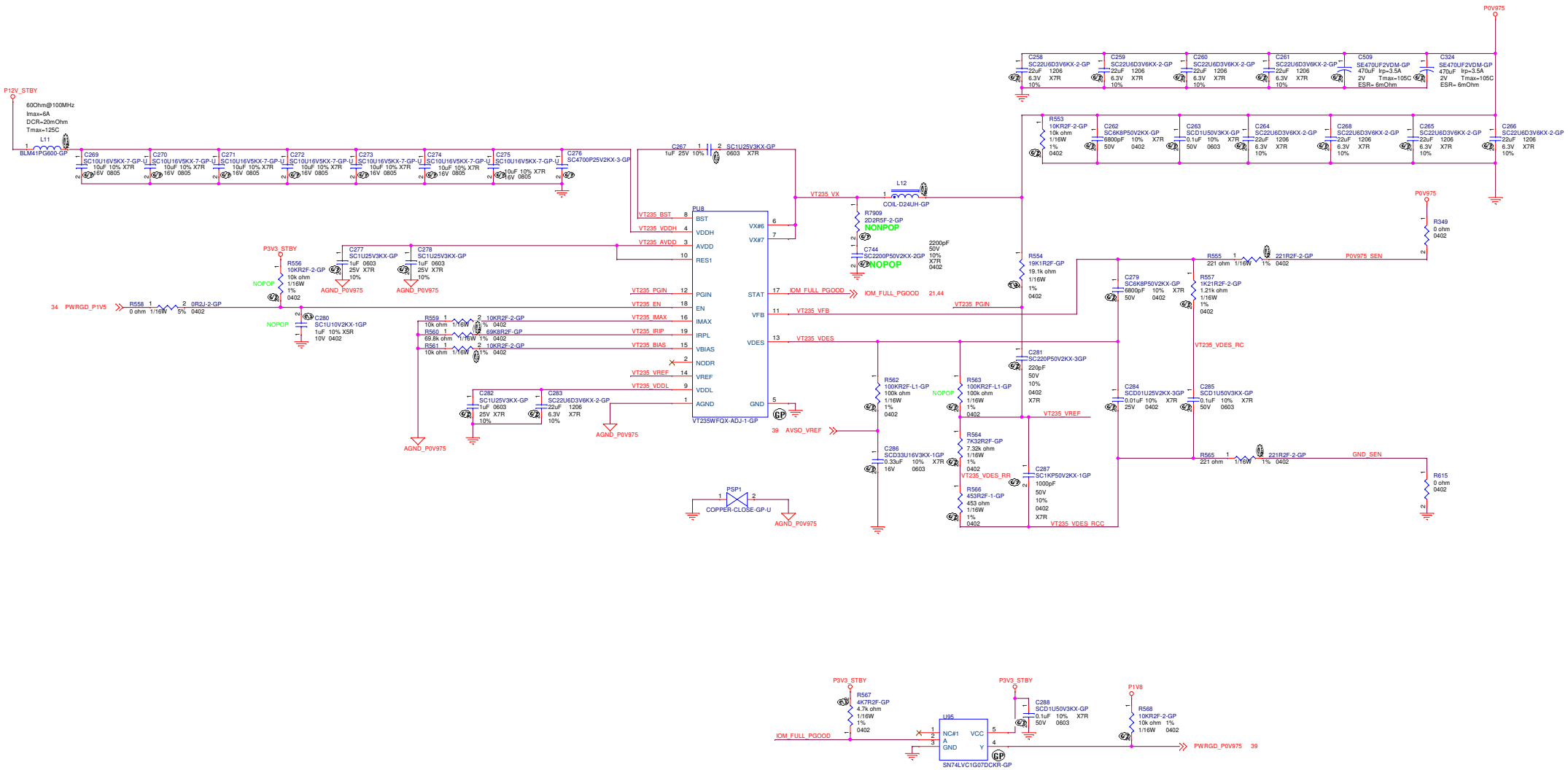

wiwynn

Bryce Canyon_IO Module
8F, 90, Sec.1, Xintai 5th Rd., Xizhi Dist., New Taipei City 22102, Taiwan (R.O.C.)
http://www.wiwynn.com

Title	PWRSW_P0V975_STBY_VT235WFQX	
Size A2	Document Number Bryce Canyon_IO Module	Rev 2
Date: Friday, December 08, 2017	Sheet 35 of 47	

wiwynn

Bryce Canyon_IO Module
8F, 90, Sec.1, Xintai 5th Rd., Xizhi Dist.,
New Taipei City 22102, Taiwan (R.O.C.)
http://www.wiwynn.com

Title: SAS3008_PCIE & SAS

Size: A3 | Document Number: Bryce Canyon_IO Module | Rev: 2

Date: Friday, December 08, 2017 | Sheet 36 of 47

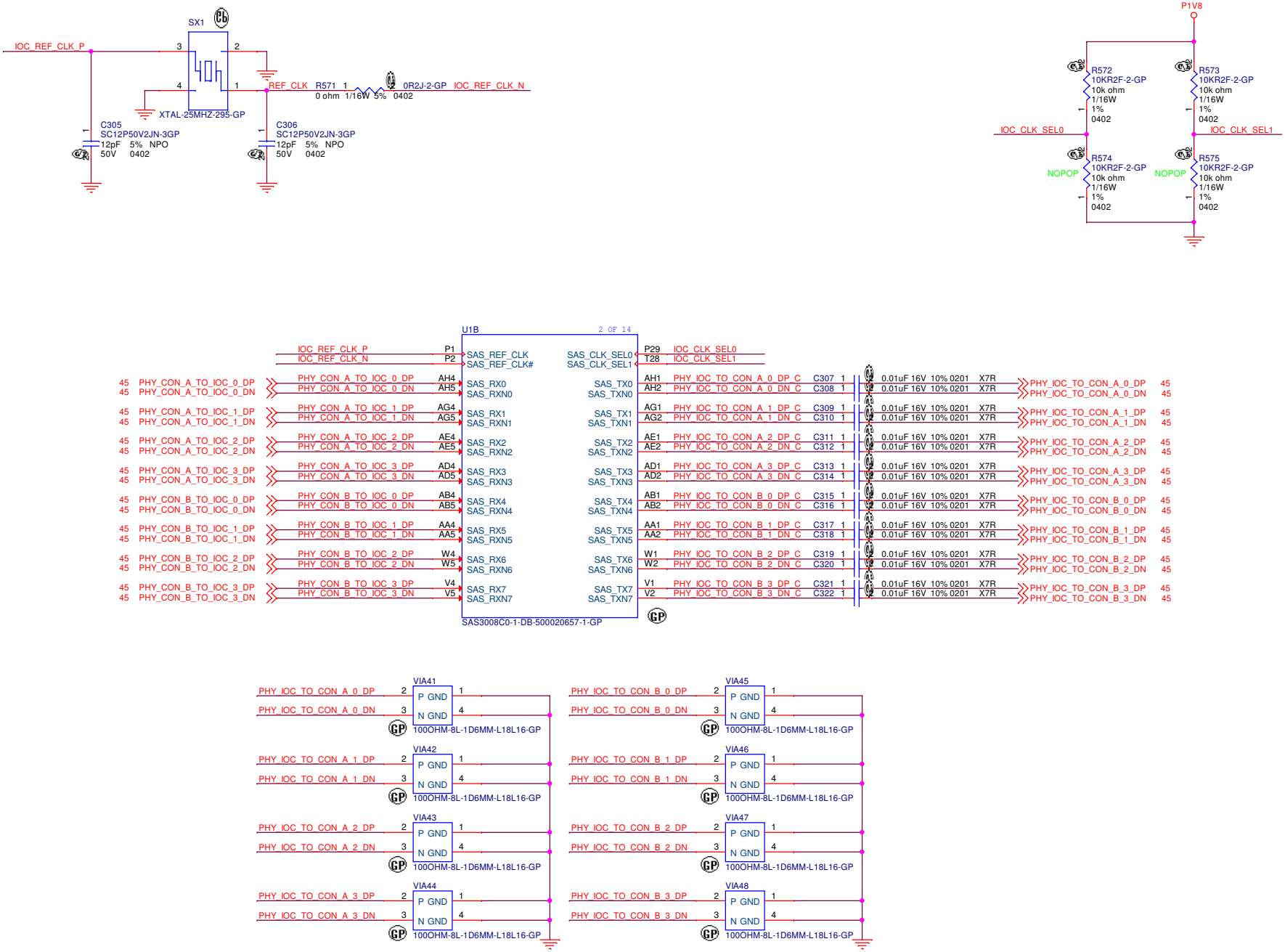

wiwynn

Bryce Canyon_IO Module
8F, 90, Sec.1, Xintai 5th Rd., Xizhi Dist.,
New Taipei City 22102, Taiwan (R.O.C.)
http://www.wiwynn.com

Title: SAS3008_PCIE & SAS

Size: A3 | Document Number: Bryce Canyon_IO Module | Rev: 2

Date: Friday, December 08, 2017 | Sheet 37 of 47

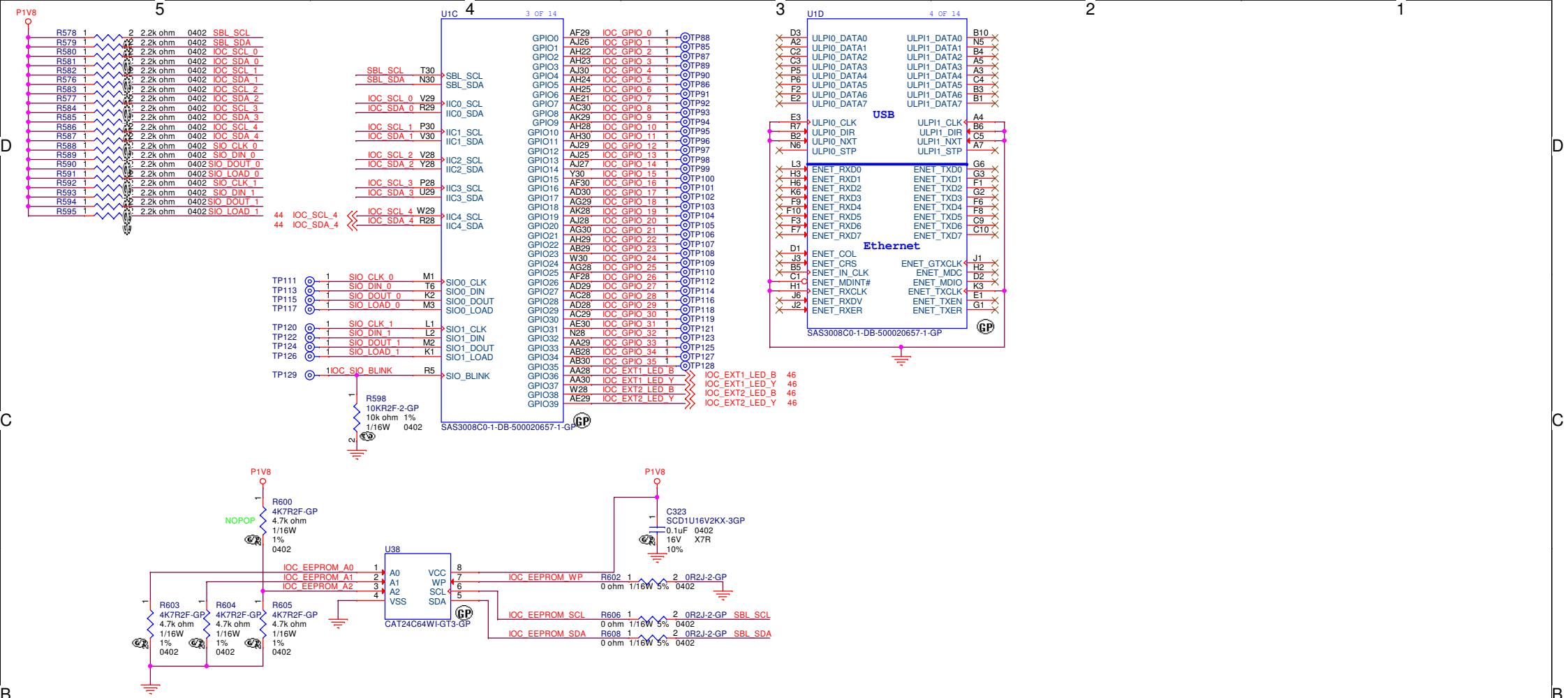

Bryce Canyon_IO Module
8F, 90, Sec.1, Xintai 5th Rd., Xizhi Dist.,
New Taipei City 22102, Taiwan (R.O.C.)
http://www.wiwynn.com

Title: **SAS3008_GPIO&USB&ETH**

Size: A3 | Document Number: **Bryce Canyon_IO Module** | Rev: 2

Date: Friday, December 08, 2017 | Sheet 38 of 47

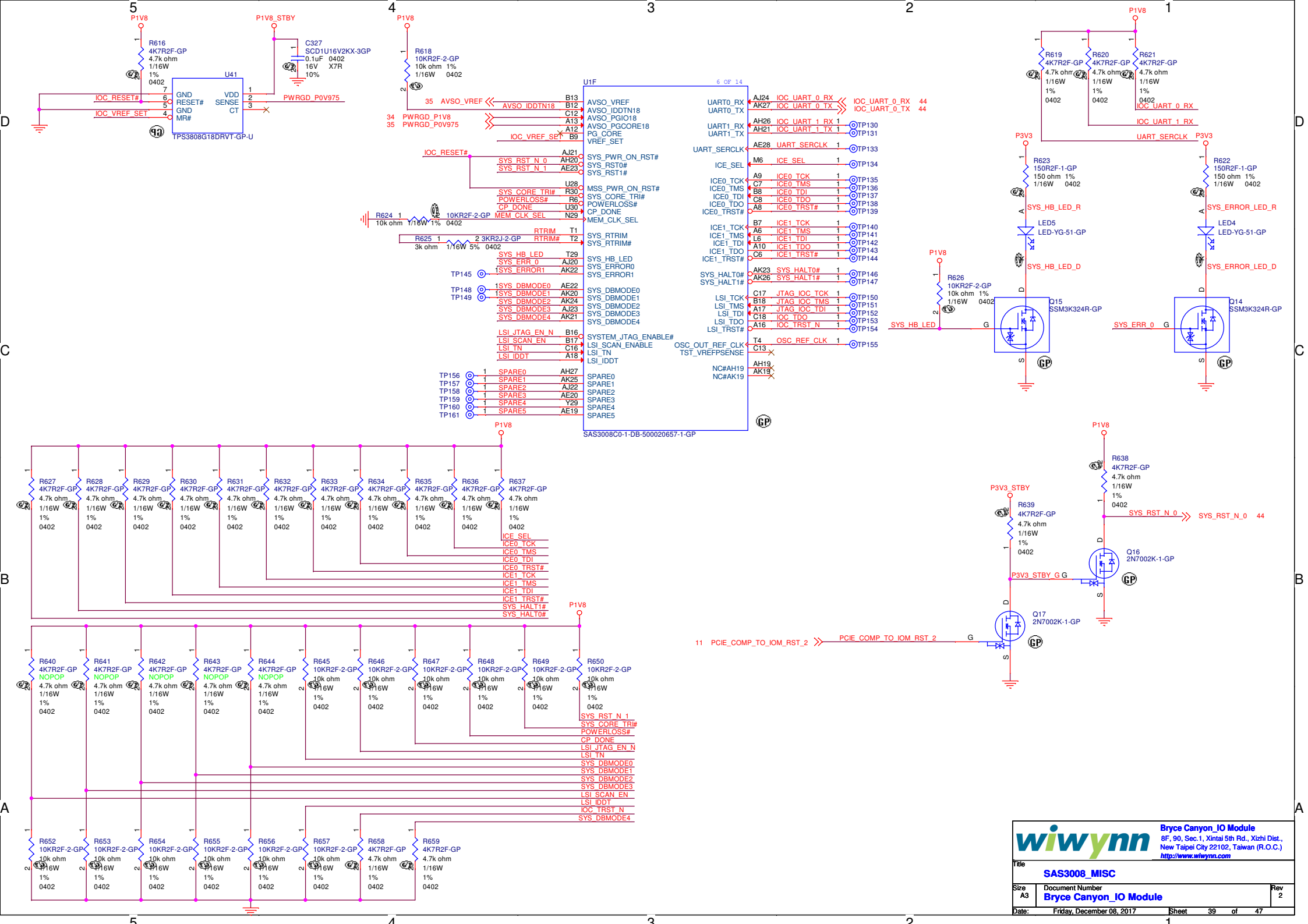

wiwynn

Bryce Canyon_IO Module
8F, 90, Sec.1, Xintai 5th Rd., Xizhi Dist., New Taipei City 22102, Taiwan (R.O.C.)
http://www.wiwynn.com

Title: SAS3008_MISC

Size: A3 | Document Number: Bryce Canyon_IO Module | Rev: 2

Date: Friday, December 08, 2017 | Sheet 39 of 47

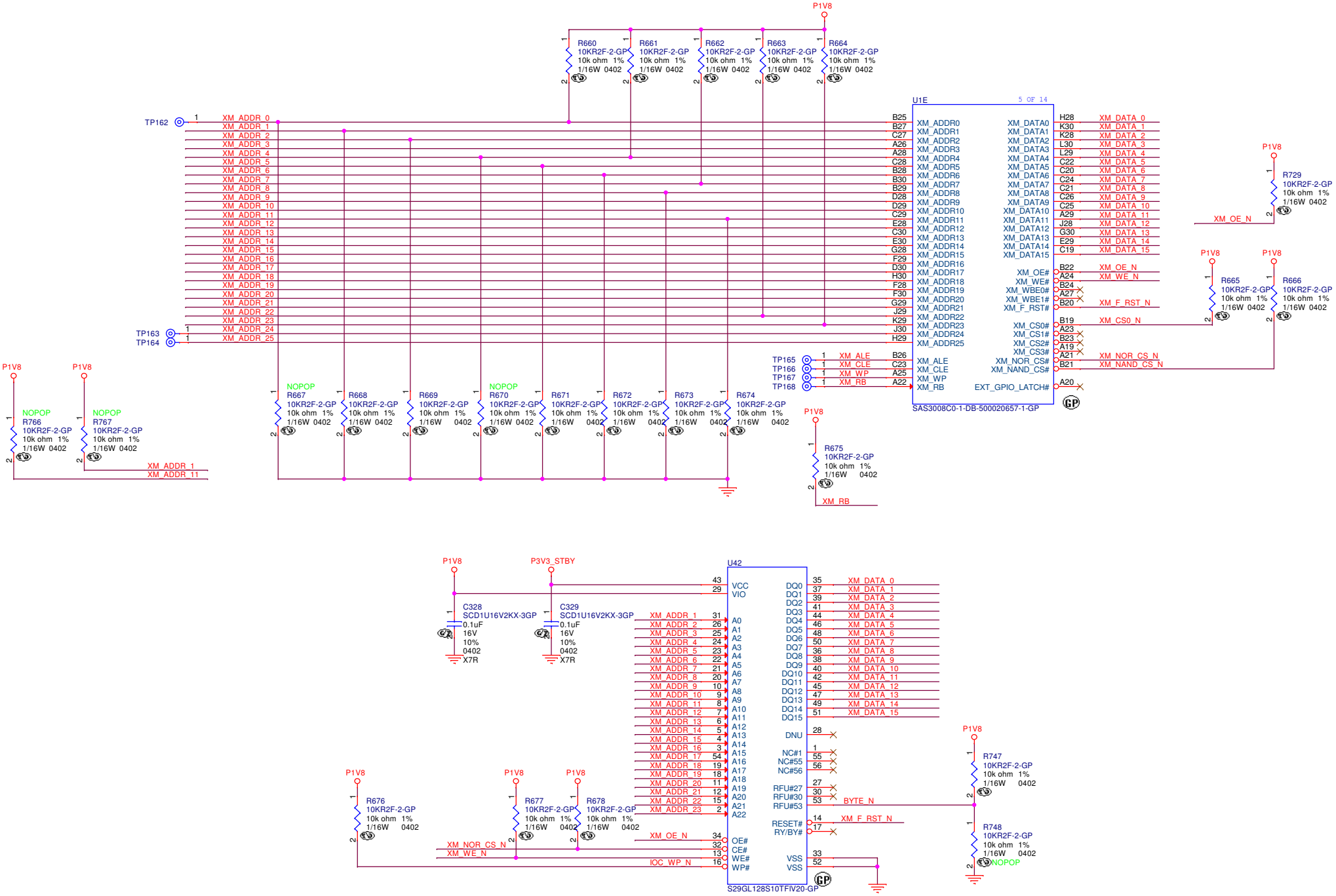

wiwynn
Bryce Canyon_IO Module
8F, 90, Sec.1, Xintai 5th Rd., Xizhi Dist.,
New Taipei City 22102, Taiwan (R.O.C.)
http://www.wiwynn.com

Title	SAS3008_FLASH
Size A3	Document Number: Bryce Canyon_IO Module
Rev	2
Date: Friday, December 08, 2017	Sheet 40 of 47

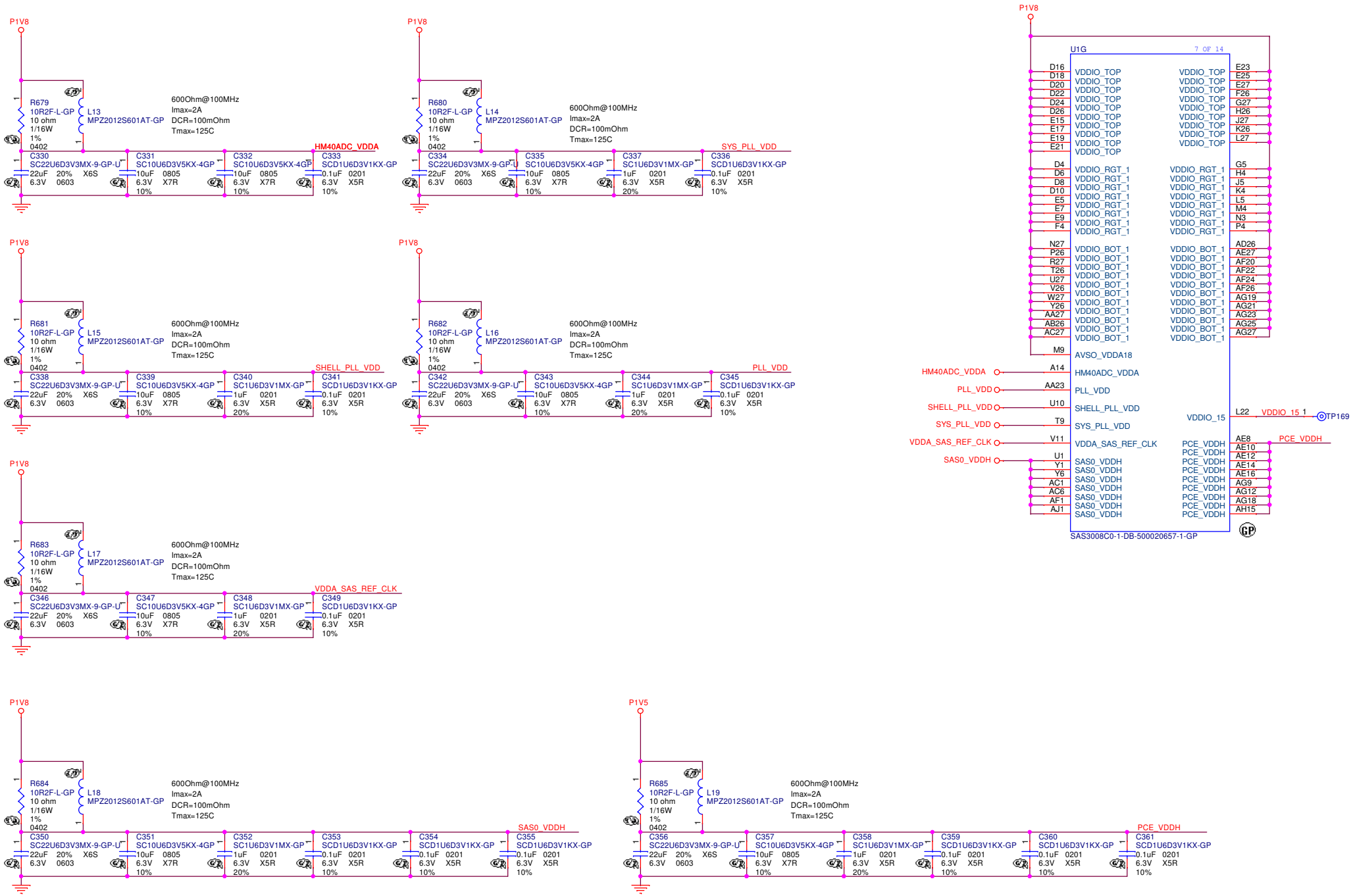

wiwynn	Bryce Canyon_IO Module 8F, 90, Sec.1, Xintai 5th Rd., Xizhi Dist., New Taipei City 22102, Taiwan (R.O.C.) http://www.wiwynn.com
Title	SAS3008_POWER_1
Size A3	Document Number: Bryce Canyon_IO Module
Rev	2
Date:	Friday, December 08, 2017
Sheet	41 of 47

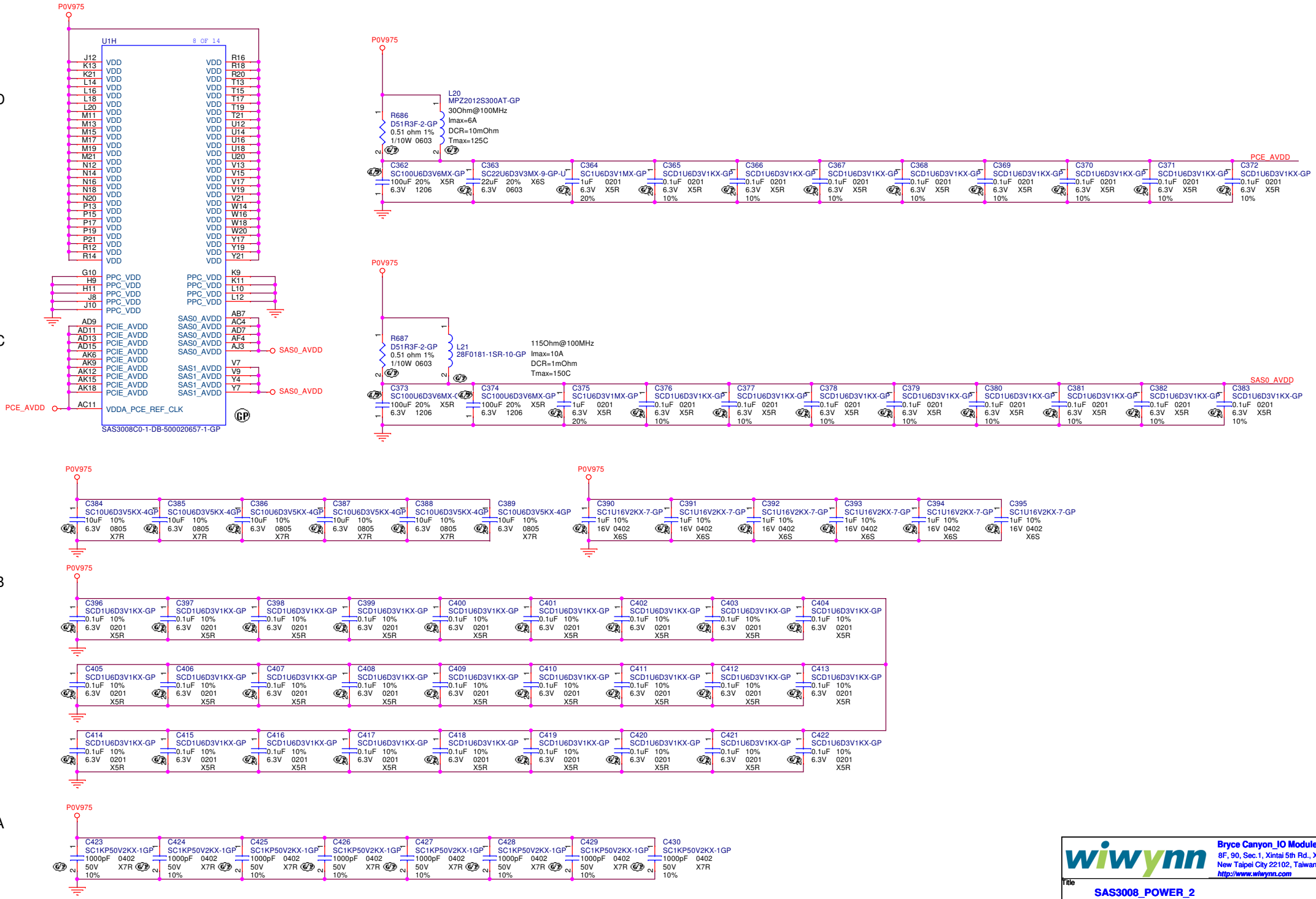

wiwynn

Bryce Canyon_IO Module
8F, 90, Sec.1, Xintai 5th Rd., Xizhi Dist.,
New Taipei City 22102, Taiwan (R.O.C.)
http://www.wiwynn.com

Title	SAS3008_POWER_2
Size A3	Document Number: Bryce Canyon_IO Module
Rev	2
Date:	Friday, December 08, 2017
Sheet	42 of 47

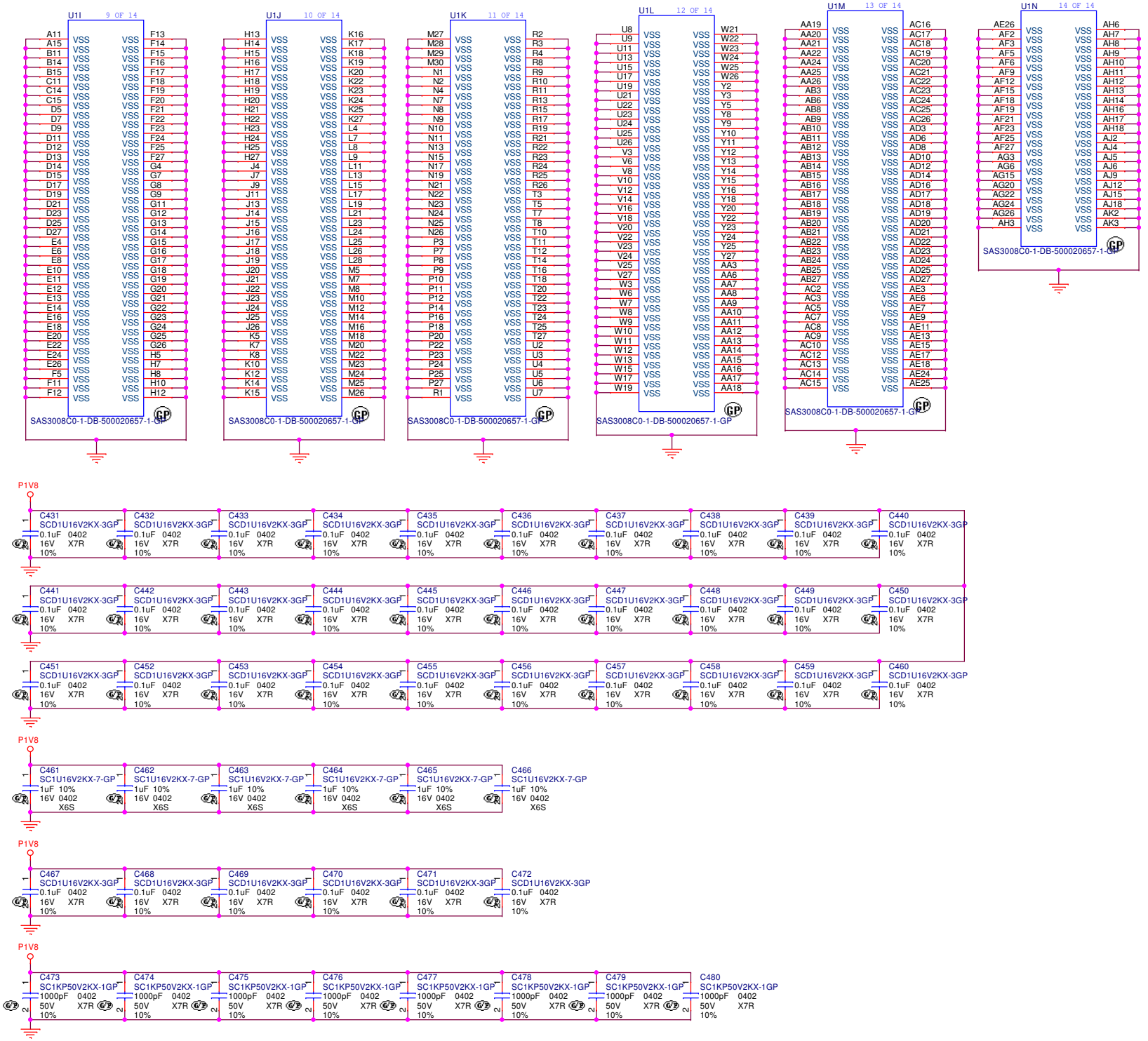

wiwynn

Bryce Canyon_IO Module
8F, 90, Sec.1, Xintai 5th Rd., Xizhi Dist.,
New Taipei City 22102, Taiwan (R.O.C.)
http://www.wiwynn.com

Title: SAS3008_POWER&GND

Size: A3 | Document Number: Bryce Canyon_IO Module | Rev: 2

Date: Friday, December 08, 2017 | Sheet 43 of 47

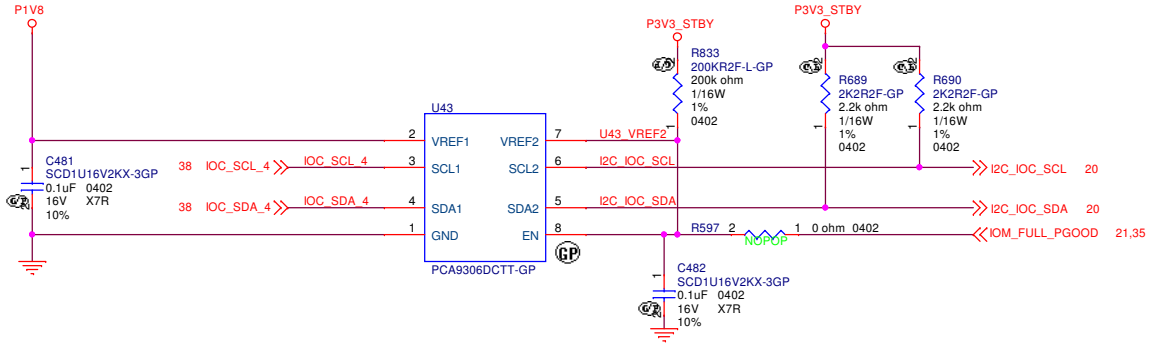

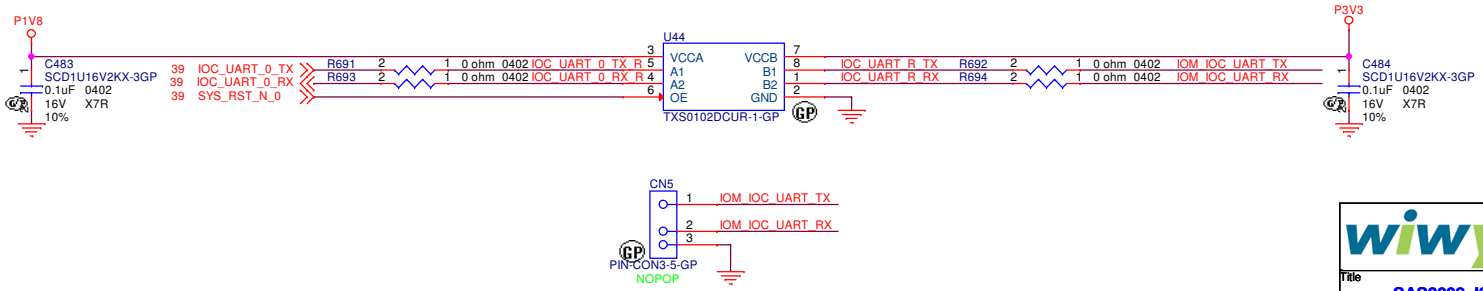

wiwynn

Bryce Canyon_IO Module
8F, 90, Sec.1, Xintai 5th Rd., Xizhi Dist.,
New Taipei City 22102, Taiwan (R.O.C.)
http://www.wiwynn.com

Title	SAS3008_I2C&UART LEVEL SHIFT	
Size A3	Document Number Bryce Canyon_IO Module	Rev 2
Date: Friday, December 08, 2017	Sheet 44 of 47	

EXT MINI SAS HD CONN_1 & 2

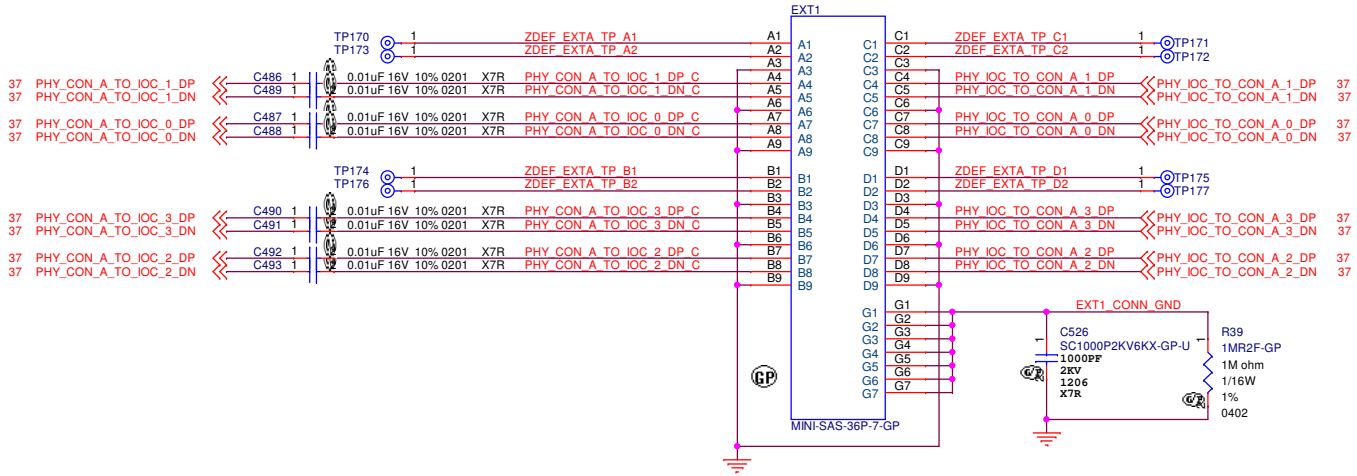

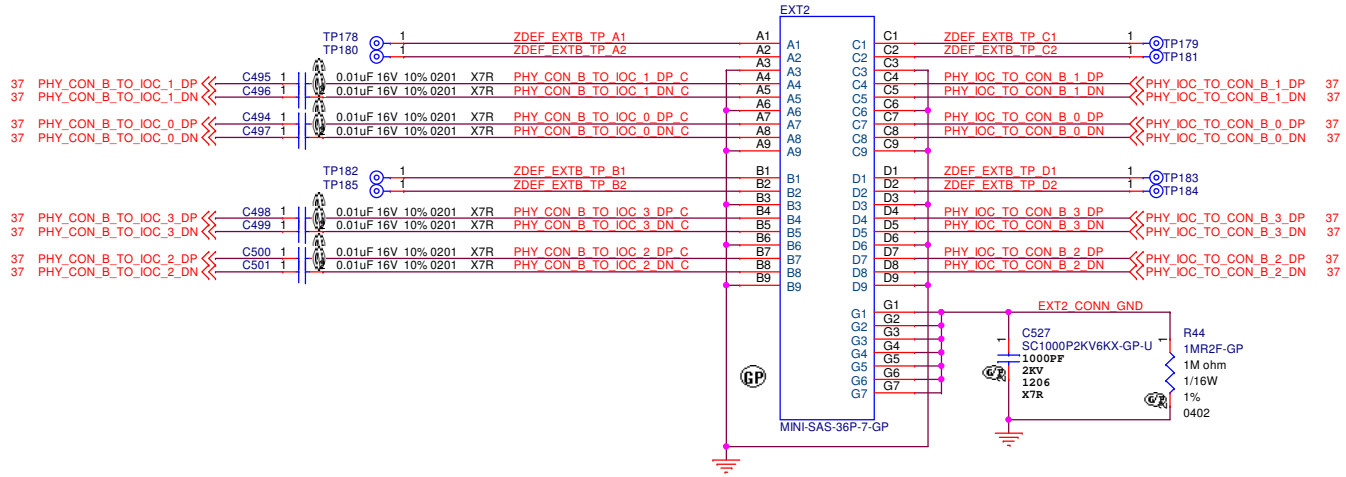

wiwynn

Bryce Canyon_IO Module
8F, 90, Sec.1, Xintai 5th Rd., Xizhi Dist.,
New Taipei City 22102, Taiwan (R.O.C.)
http://www.wiwynn.com

Title	SAS3008_EXT_MINI SAS CONN*2
Size A3	Document Number: Bryce Canyon_IO Module
Rev	2
Date: Friday, December 08, 2017	Sheet 45 of 47

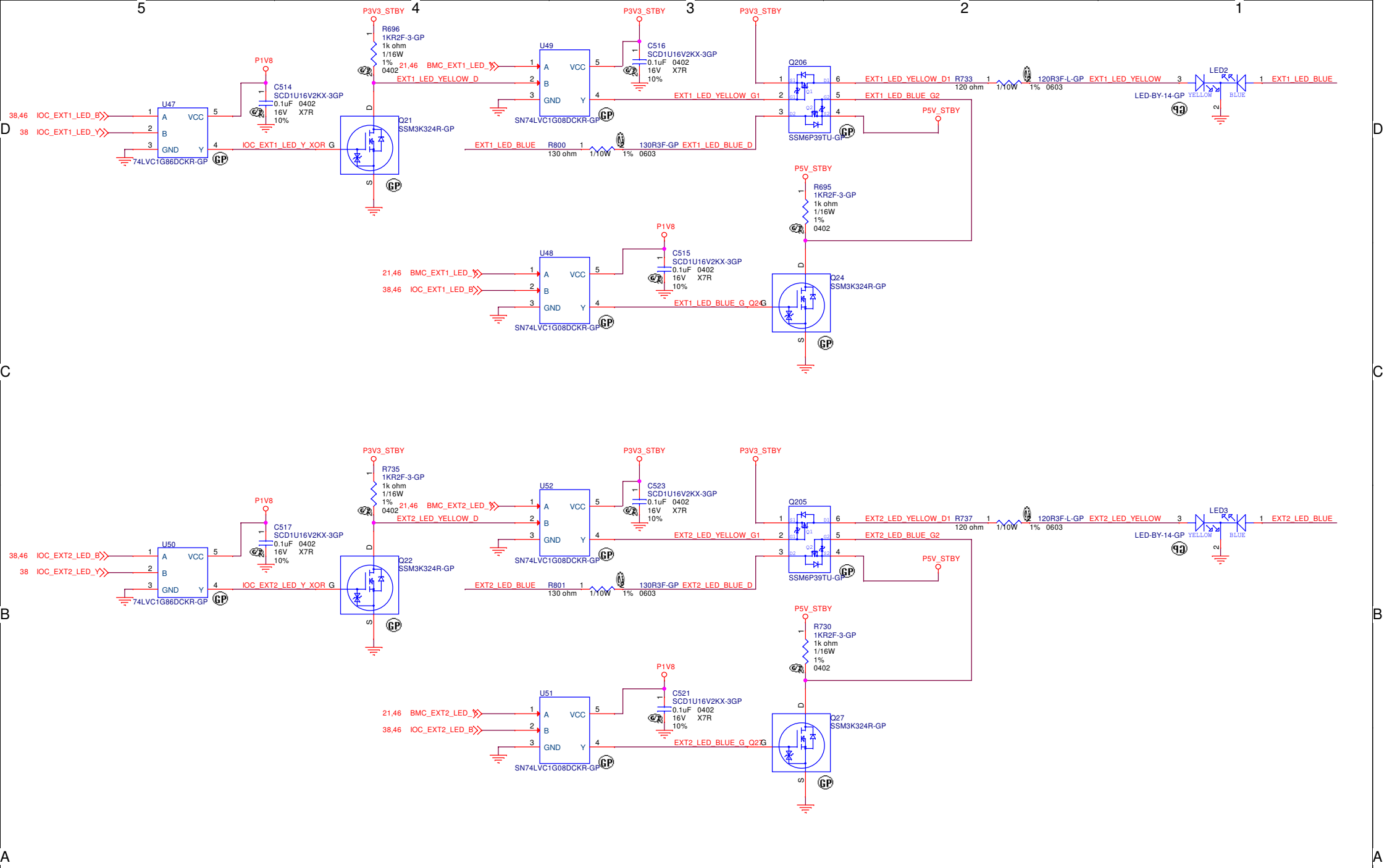

wiwynn

Bryce Canyon_IO Module
8F, 90, Sec.1, Xintai 5th Rd., Xizhi Dist.,
New Taipei City 22102, Taiwan (R.O.C.)
http://www.wiwynn.com

Title: SAS3008_SAS CONN LED

Size: A3 | Document Number: Bryce Canyon_IO Module | Rev: 2

Date: Friday, December 08, 2017 | Sheet 46 of 47

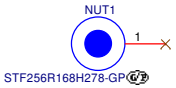

wiwynn
Bryce Canyon_IO Module
8F, 90, Sec.1, Xintai 5th Rd., Xizhi Dist.,
New Taipei City 22102, Taiwan (R.O.C.)
http://www.wiwynn.com

Title
SCREW HOLE

Size	Document Number	Rev
A3	Bryce Canyon_IO Module	2

Date: Friday, December 08, 2017 Sheet 47 of 47