Bryce Canyon

IO Module_M2

PCB P/N: 16342

Version: 2

Layer: 8 Layers

WIWYNN CONFIDENTIAL

wiwynn
Bryce Canyon_IO Module_M.2
8F, 90, Sec.1, Xintai 5th Rd., Xizhi Dist.,
New Taipei City 22102, Taiwan (R.O.C.)
http://www.wiwynn.com

Title	COVER PAGE	
Size A3	Document Number Bryce Canyon_IO Module_M.2	Rev 2
Date: Friday, December 08, 2017	Sheet 1 of 38	

TABLE OF CONTENTS

PAGE	PAGE TITLE	PAGE	PAGE TITLE	PAGE	PAGE TITLE
01	COVER PAGE				
02	TABLE OF CONTENTS				
03	BLOCK DIAGRAM				
04	POWER DISTRIBUTION				
05	POWER FLOW				
06	POWER SEQUENCE				
07	CLOCK TREE				
08	STACK-UP				
09	I2C TOPOLOGY				
10	UART TOPOLOGY				
11	XCEDE CONNECTOR				
12	OCP2.0_MEZZ CONN_A				
13	RESERVE				
14	USB2.0 x1				
15	POWER & RESET BUTTON				
16	MONOLAKE POWER STATUS LED				
17	TPM				
18	I2C SWITCH & BUFFER				
19	I2C DEVICES				
20	AST2500 I2C DDR LPC				
21	AST2500 UART LAN SPI				
22	AST2500 FAN ADC VGA				
23	AST2500 Power				
24	AST2500 Strap pin				
25	AST2500 VOLTAGE SENSE				
26	DEBUG PORT				
27	HOT SWAP CONTROLLER ADM1278				
28	PWRSW_P5V_STBY_TPS53318				
29	PWRSW_P3V3_STBY_TPS53318				
30	PWRSW_P3V3_M2_TPS53318				
31	PWRLDO_P2V5_STBY_TPS74801				
32	PWRSW_P1V8_STBY_TPS53312				
33	PWRLDO_P1V2_STBY_TPS74801				
34	PWRLDO_P1V15_STBY_TPS74801				
35	M.2 CONNECTOR				
36	M.2 I2C LEVEL SHIFT				
37	SCREW HOLE				

BLOCK DIAGRAM

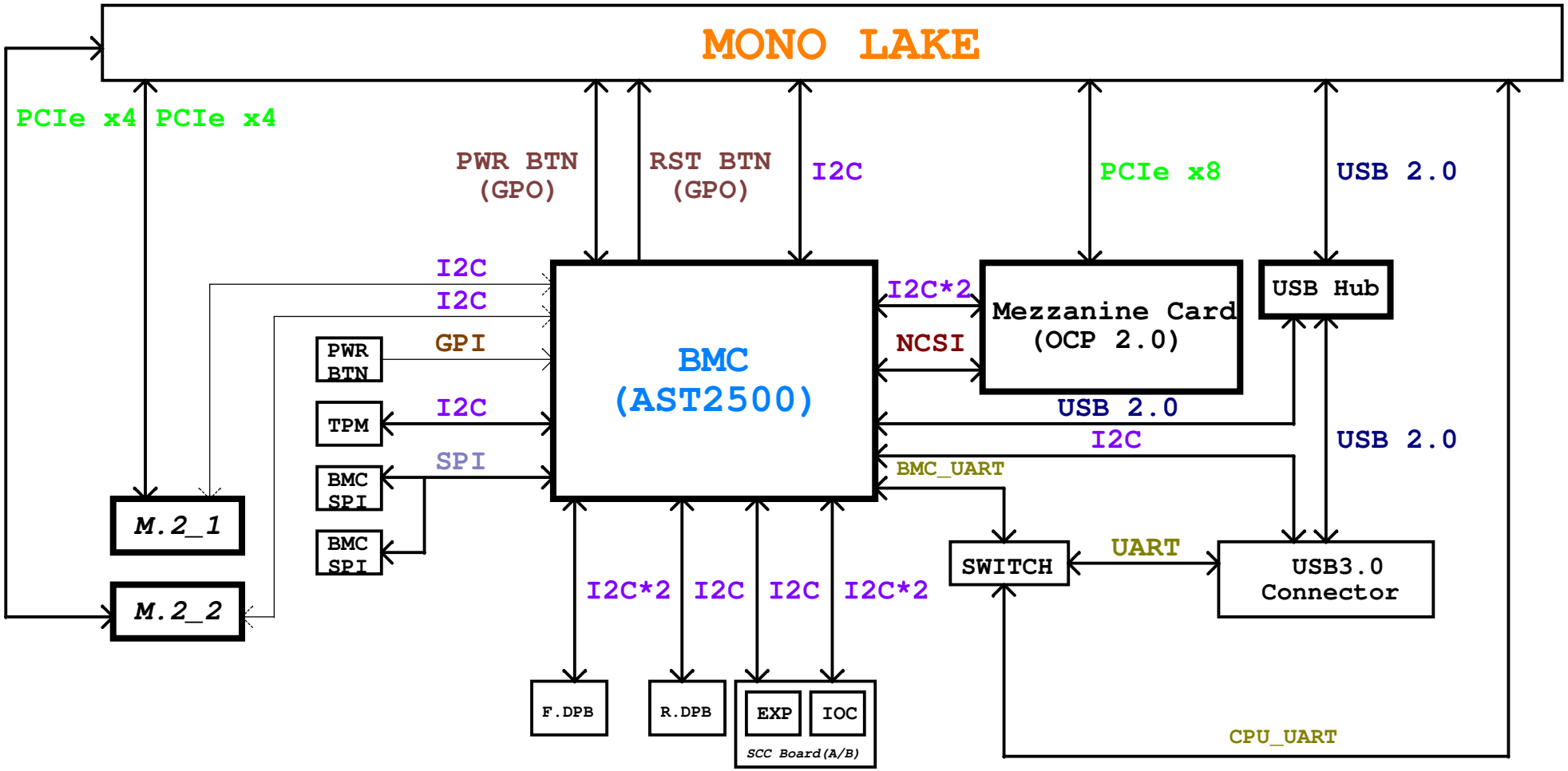

wiwynn

Bryce Canyon_IO Module_M.2
8F, 90, Sec.1, Xintai 5th Rd., Xizhi Dist., New Taipei City 22102, Taiwan (R.O.C.)
http://www.wiwynn.com

Title	BLOCK DIAGRAM
Size A3	Document Number: Bryce Canyon_IO Module_M.2
Rev	2
Date:	Wednesday, August 09, 2017
Sheet	3 of 38

POWER DISTRIBUTION

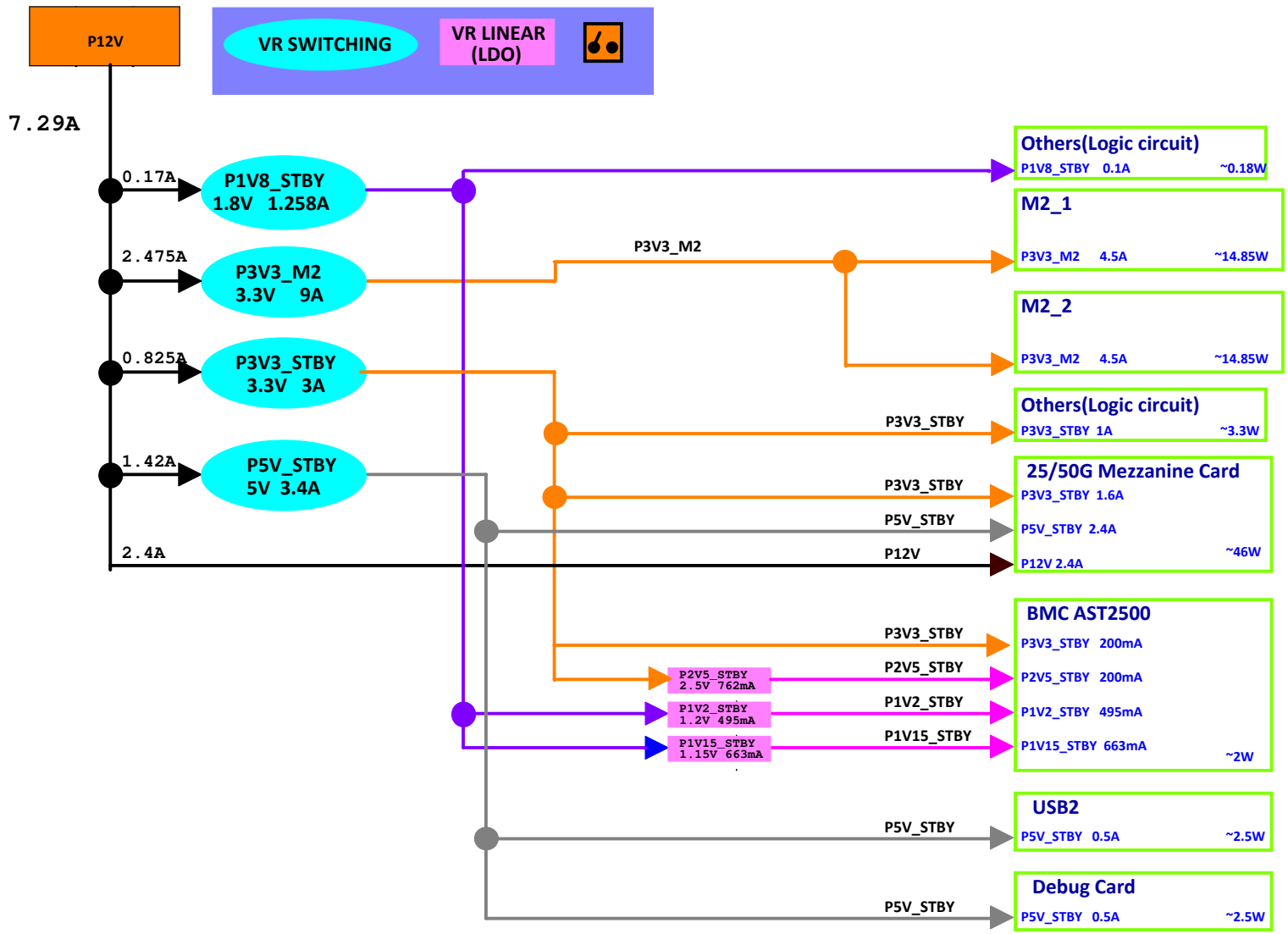

wiwynn	Bryce Canyon_IO Module_M.2 8F, 90, Sec.1, Xintai 5th Rd., Xizhi Dist., New Taipei City 22102, Taiwan (R.O.C.) http://www.wiwynn.com	
Title	POWER DISTRIBUTION	
Size A3	Document Number Bryce Canyon_IO Module_M.2	Rev 2
Date: Friday, December 08, 2017	Sheet 4 of 38	

POWER FLOW

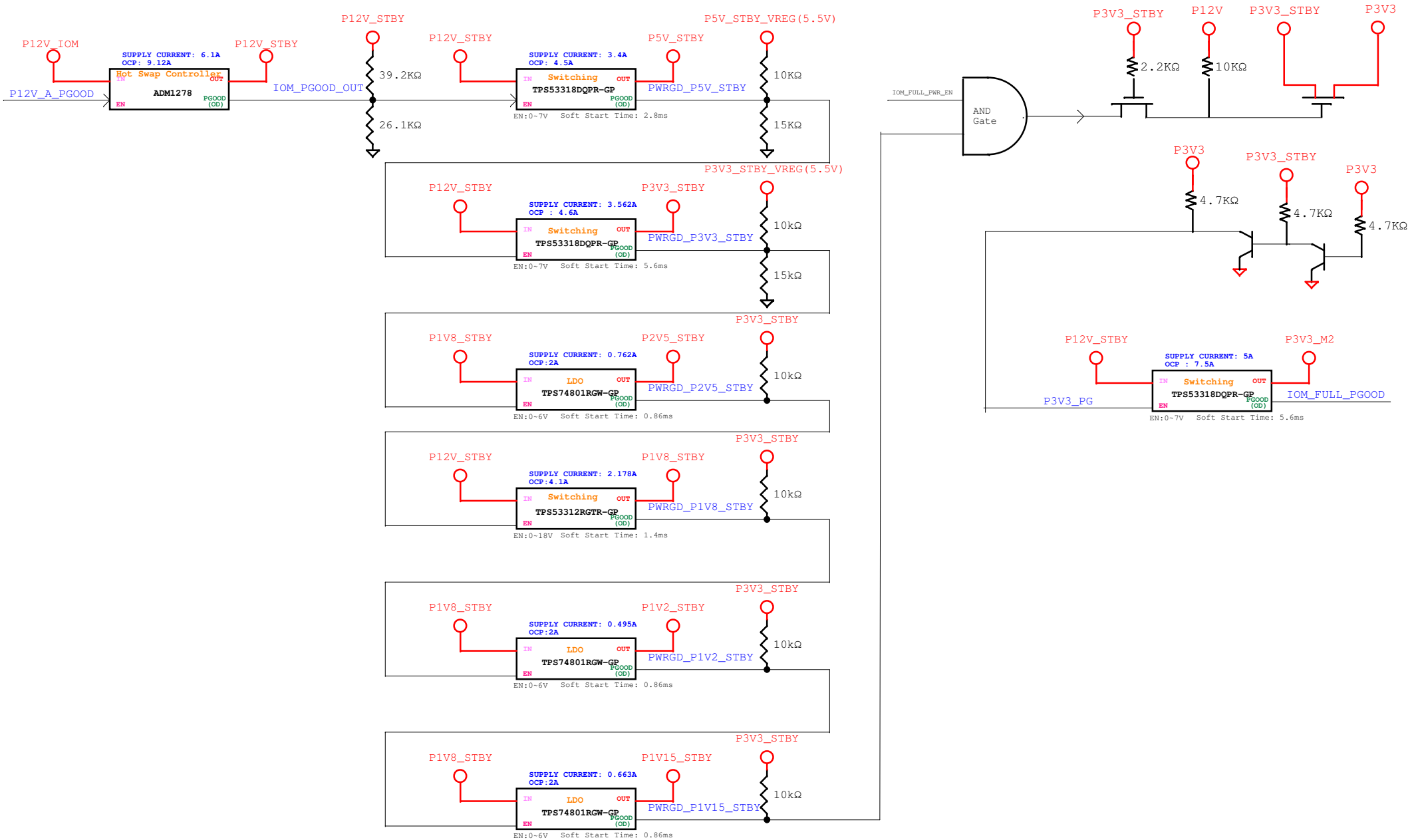

wiwynn

Bryce Canyon_IO Module_M.2
8F, 90, Sec.1, Xintai 5th Rd., Xizhi Dist., New Taipei City 22102, Taiwan (R.O.C.)
http://www.wiwynn.com

Title	POWER FLOW	
Size A2	Document Number Bryce Canyon_IO Module_M.2	Rev 2
Date: Friday, December 08, 2017	Sheet 5 of 38	

POWER SEQUENCE

SOURCE	DESTINATION	SIG/PWR
F./R.DPB(P12V_IOM)	IO MODULE	P12V_STBY
P12V_STBY	USB, DEBUG CARD, 25/50G	P5V_STBY
P12V_STBY	BMC, 25/50G, others	P3V3_STBY
P3V3_STBY	BMC	P2V5_STBY
P12V_STBY	BMC	P1V8_STBY
P1V8_STBY	BMC	P1V2_STBY
P1V8_STBY	BMC	P1V15_STBY
P3V3_STBY	NIC CARD	P3V3
P12V_STBY	M2_1	P3V3_M2
P12V_STBY	M2_2	P3V3_M2
BMC	F.DPB	COMP_PWR_EN
MONO LAKE	IOC, 25/50G	PCIE_RST_N

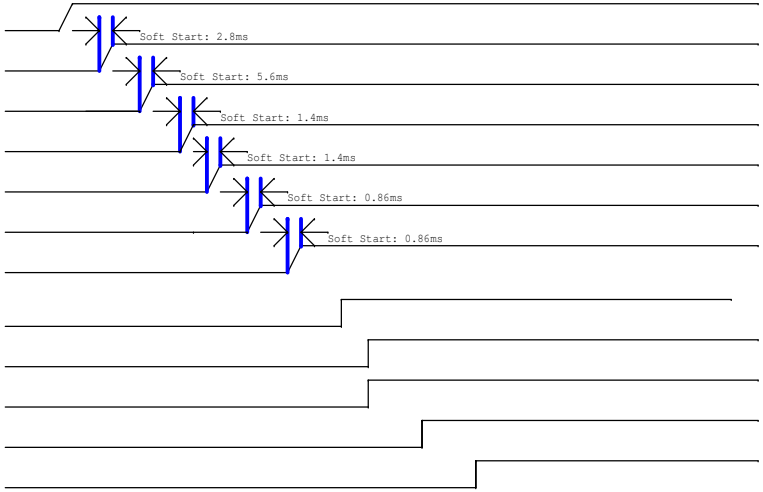

wiwynn
Bryce Canyon_IO Module_M.2
8F, 90, Sec.1, Xintai 5th Rd., Xizhi Dist.,
New Taipei City 22102, Taiwan (R.O.C.)
http://www.wiwynn.com

Title	POWER SEQUENCE	
Size A3	Document Number Bryce Canyon_IO Module_M.2	Rev 2
Date: Friday, December 08, 2017	Sheet 6 of 38	

CIOCK TREE

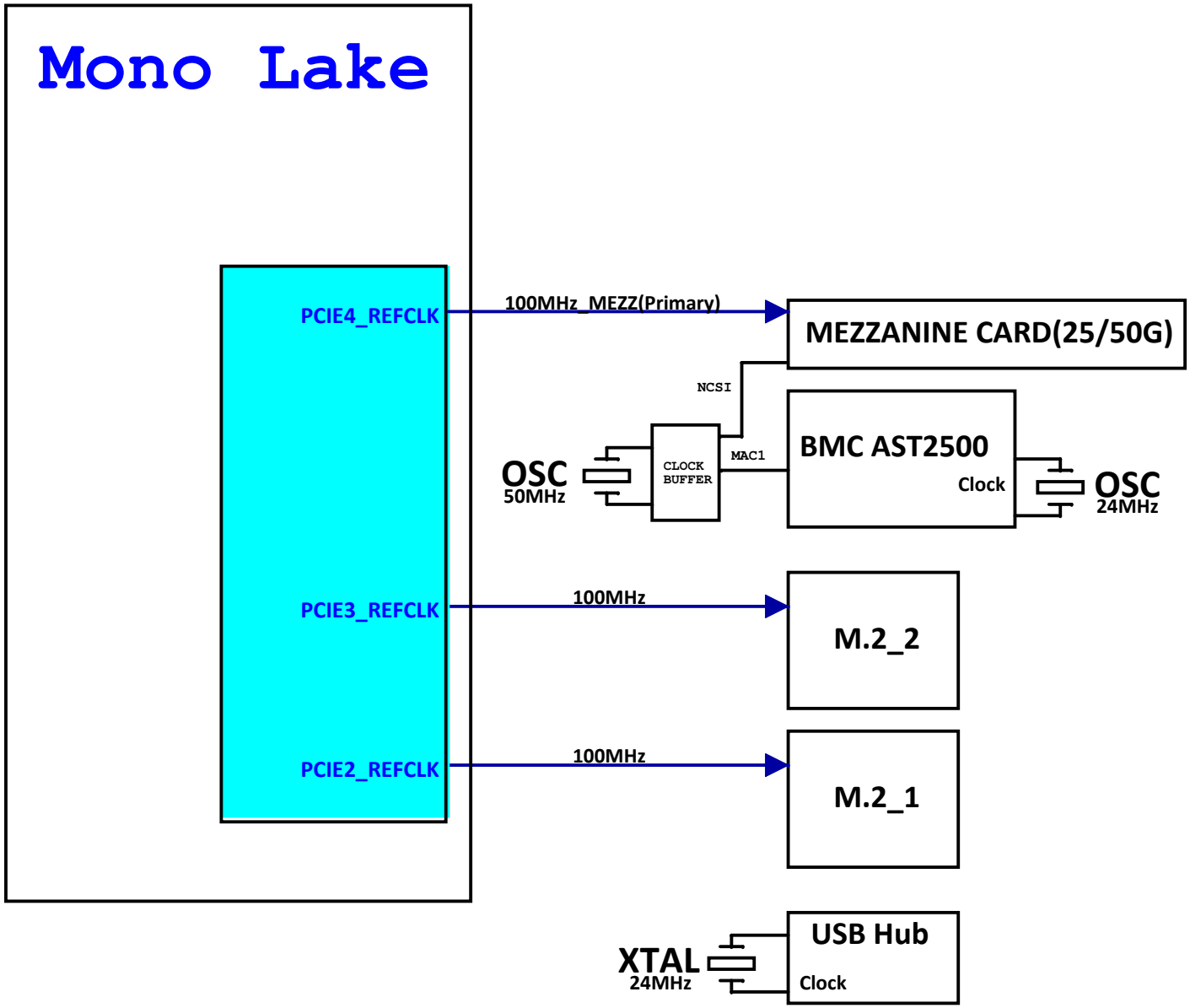

wiwynn

Bryce Canyon_IO Module_M.2
8F, 90, Sec.1, Xintai 5th Rd., Xizhi Dist.,
New Taipei City 22102, Taiwan (R.O.C.)
http://www.wiwynn.com

Title	CLOCK TREE
Size A3	Document Number: Bryce Canyon_IO Module_M.2
Rev	2
Date:	Wednesday, August 09, 2017
Sheet	7 of 38

STACKUP INFORMATION

Board Number:	16342-SD
Project name:	Bryce Canyon
Model Name:	IOM_M.2
Layer Count:	8 Layer
Date:	2017/2/6
edium Loss Material:	NPG171+VLP/TU863+VLP (Tg : 170, Td : 320)
Gold Finger(Y/N):	N
Customer:	Fiona
EE engineer	Kent Tsai
SI Engineer	Harrison Lin

Version 01

Layer	Cu oz	Thickness Wiwynn		Glass/Copper Style	Er Wiwynn	Df(1G)
Mask		0.5			3.4	0.025
Signal	3/8 oz+plating	1.7				
Prepreg		3			3.9	0.006
GND	1 oz	1.3				
Core		4			3.9	0.006
Signal	1 oz	1.3				
Prepreg		16.4			4.2	0.006
POWER	1 oz	1.3				
Core		4			3.8	0.006
POWER	1 oz	1.3	0.0	0		
Prepreg		16.4	0	0	4.2	0.006
Signal	1 oz	1.3	0	0		
Core		4	0	0	3.9	0.006
GND	1 oz	1.3	0	0		
Prepreg		3	0	0	3.9	0.006
Signal	3/8 oz+plating	1.7	0	0		
Mask		0.5	0		3.4	0.025
ent: 1.6 ± 10% mm	mil	63				
	mm	1.60				

Single Ended Type(mil)

Imp Variation	50 Inner/Outer+/-5ohm			
Bus	MISC./I2C			
Type Layers	SE 1,3,6,8			
	Wiwynn Width	Imp	Width	Imp
S1	5(L2)	50.08		
P2	reference layer			
S3	5(L2/L4)	49.28		
P4	reference layer			
P5	reference layer			
S6	5(L5/L7)	49.28		
P7	reference layer			
S8	5(L7)	50.08		

Differential Type(mil)

Imp Variation	85 Inner/Outer+/-10%						100 Inner/Outer+/-10%					
Bus	PCIe/Clock/USB						Clock/SATA					
Type Layers	DP 1,3,6,8						DP 1,3,6,8					
	Wiwynn Width	Space	Imp	Width	Space	Imp	Wiwynn Width	Space	Imp	Width	Space	Imp
S1	5.75(L2)	6.5	85.36				4.9(L2)	11.1	96.82			
P2	reference layer						reference layer					
S3	5.5(L2/L4)	7.5	84.9				4(L2/L4)	8	97.59			
P4	reference layer						reference layer					
P5	reference layer						reference layer					
S6	5.5(L5/L7)	7.5	84.9				4(L5/L7)	8	97.59			
P7	reference layer						reference layer					
S8	5.75(L7)	6.5	85.36				4.9(L7)	11.1	96.82			

wiwynn
Bryce Canyon_IO Module_M.2
8F, 90, Sec.1, Xintai 5th Rd., Xizhi Dist., New Taipei City 22102, Taiwan (R.O.C.)
http://www.wiwynn.com

Title: STACK UP

Size: A3 | Document Number: Bryce Canyon_IO Module_M.2 | Rev: 2

Date: Wednesday, August 09, 2017 | Sheet 8 of 38

I2C TOPOLOGY

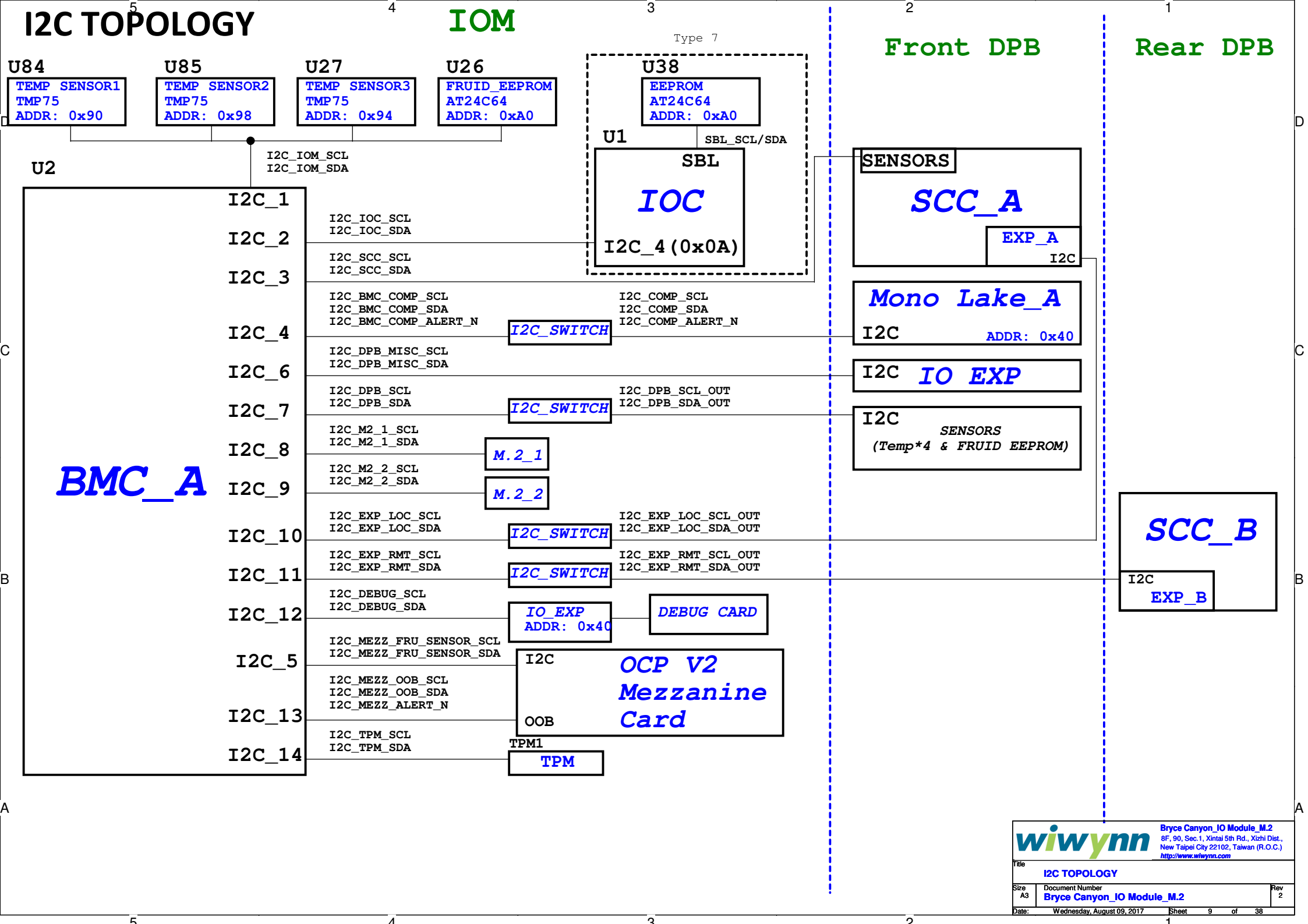

wiwynn

Bryce Canyon_IO Module_M.2
8F, 90, Sec.1, Xintai 5th Rd., Xizhi Dist.,
New Taipei City 22102, Taiwan (R.O.C.)
http://www.wiwynn.com

Title	I2C TOPOLOGY
Size A3	Document Number: Bryce Canyon_IO Module_M.2
Rev	2
Date:	Wednesday, August 09, 2017
Sheet	9 of 38

UART TOPOLOGY

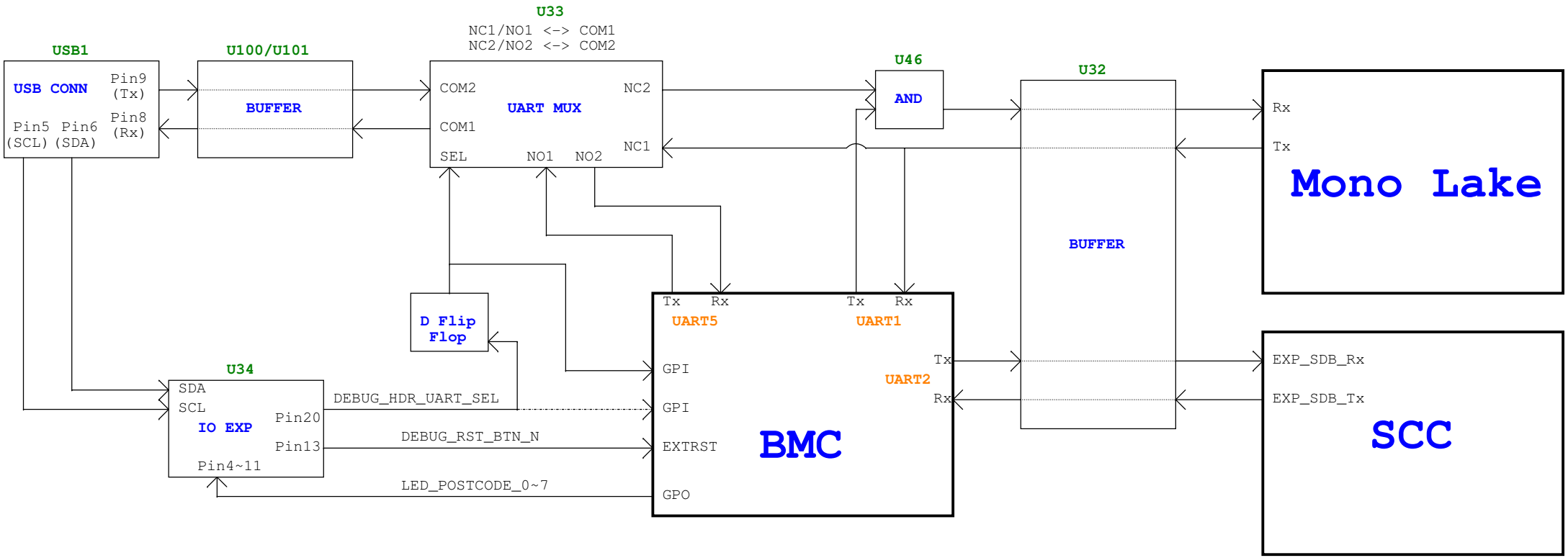

wiwynn

Bryce Canyon_IO Module_M.2
8F, 90, Sec.1, Xintai 5th Rd., Xizhi Dist.,
New Taipei City 22102, Taiwan (R.O.C.)
http://www.wiwynn.com

Title	CLOCK DIAGRAM
Size A3	Document Number: Bryce Canyon_IO Module_M.2
Rev	2
Date:	Wednesday, August 09, 2017
Sheet	10 of 38

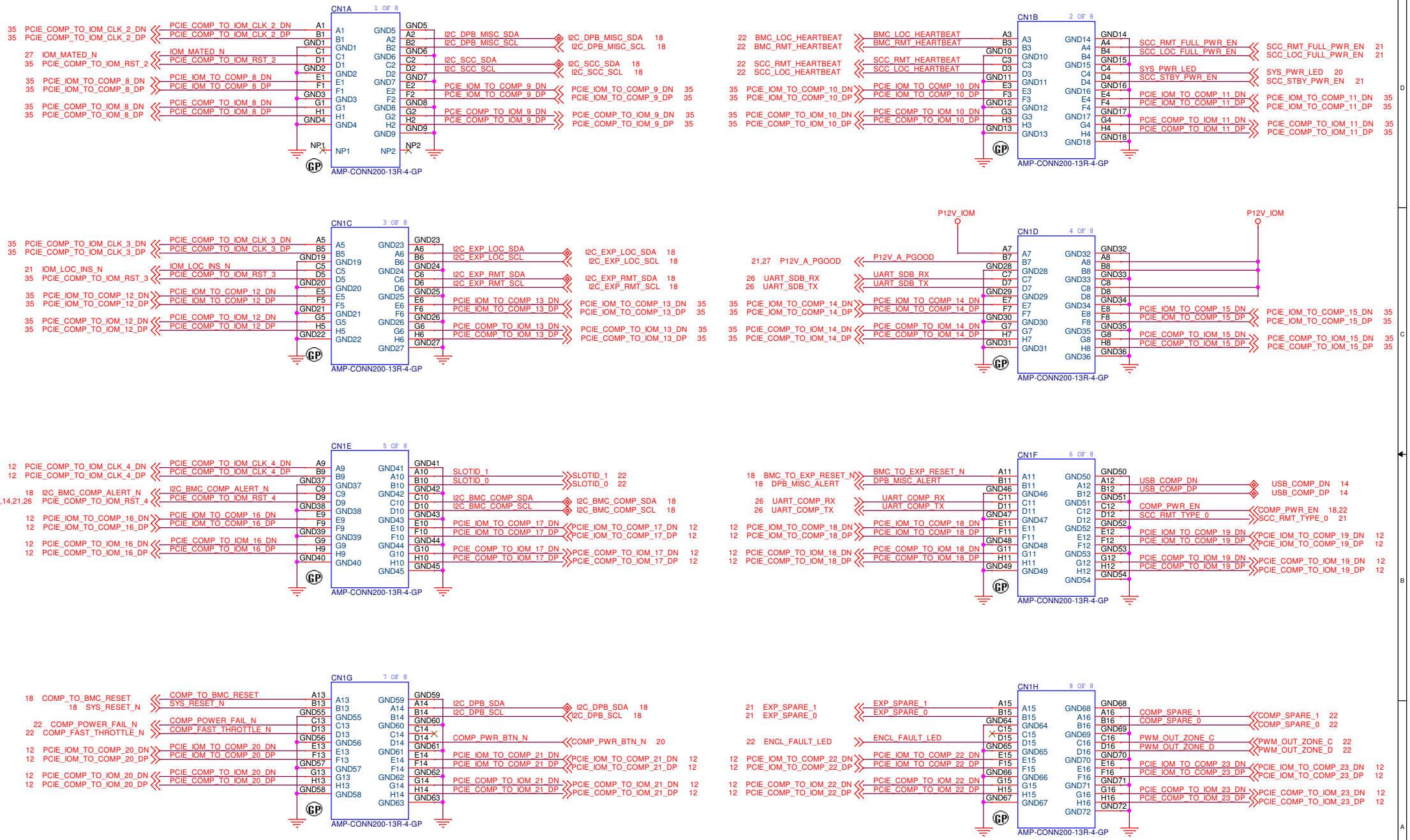

wiwynn

Bryce Canyon_IO Module_M.2
8F, 90, Sec.1, Xintai 5th Rd., Xizhi Dist.,
New Taipei City 22102, Taiwan (R.O.C.)
http://www.wiwynn.com

Title	XCEDE CONNECTOR
Size A3	Document Number: Bryce Canyon_IO Module_M.2 — Rev 2
Date: Friday, December 08, 2017	Sheet 11 of 38

OCP2.0 MEZZ_A

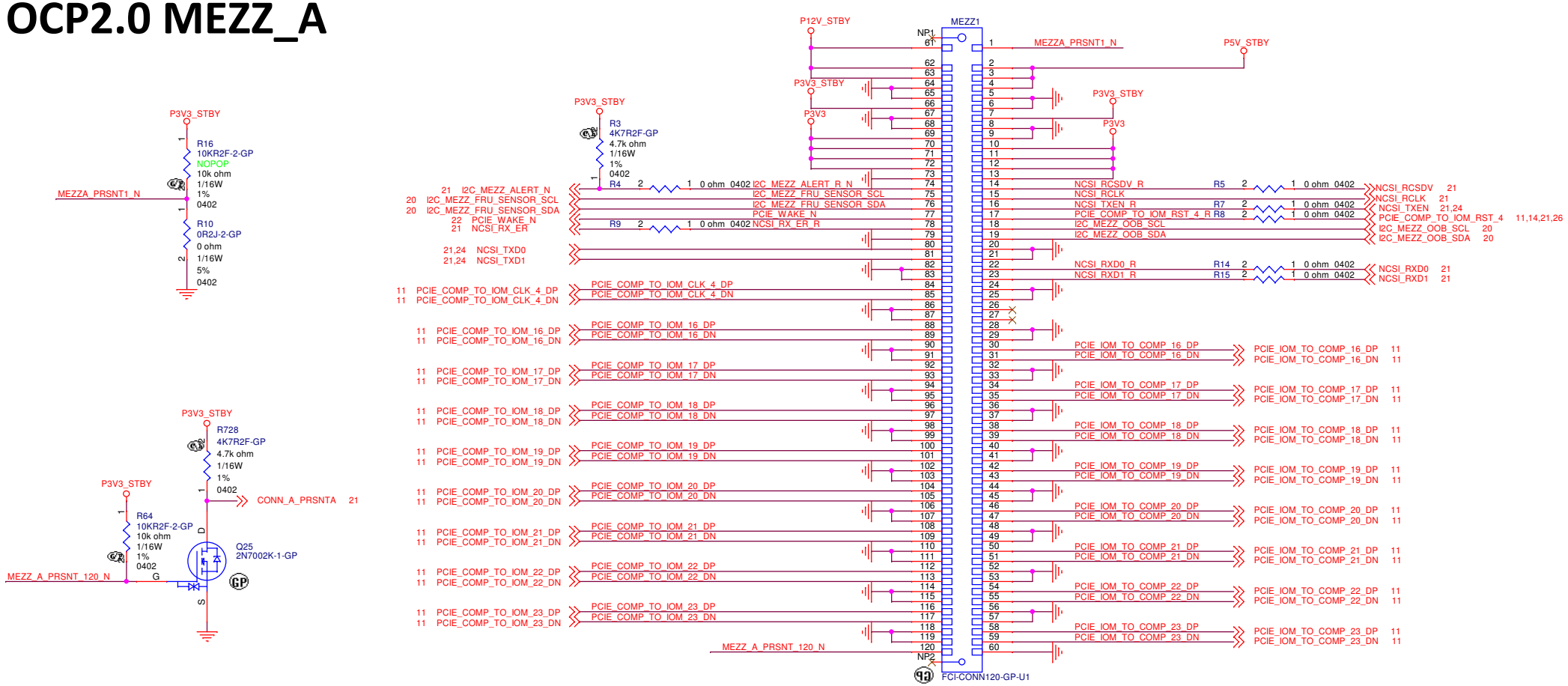

Bryce Canyon_IO Module_M.2
8F, 90, Sec.1, Xintai 5th Rd., Xizhi Dist.,
New Taipei City 22102, Taiwan (R.O.C.)
http://www.wiwynn.com

Title	OCP2.0_MEZZ CONN_A
Size A3	Document Number: Bryce Canyon_IO Module_M.2
Rev	2
Date:	Friday, December 08, 2017
Sheet	12 of 38

Bryce Canyon_IO Module_M.2
8F, 90, Sec.1, Xintai 5th Rd., Xizhi Dist.,
New Taipei City 22102, Taiwan (R.O.C.)
http://www.wiwynn.com

Title
OCP2.0_MEZZ CONN_B & C

Size	Document Number	Rev
A3	Bryce Canyon_IO Module_M.2	2

Date: Wednesday, August 09, 2017 Sheet 13 of 38

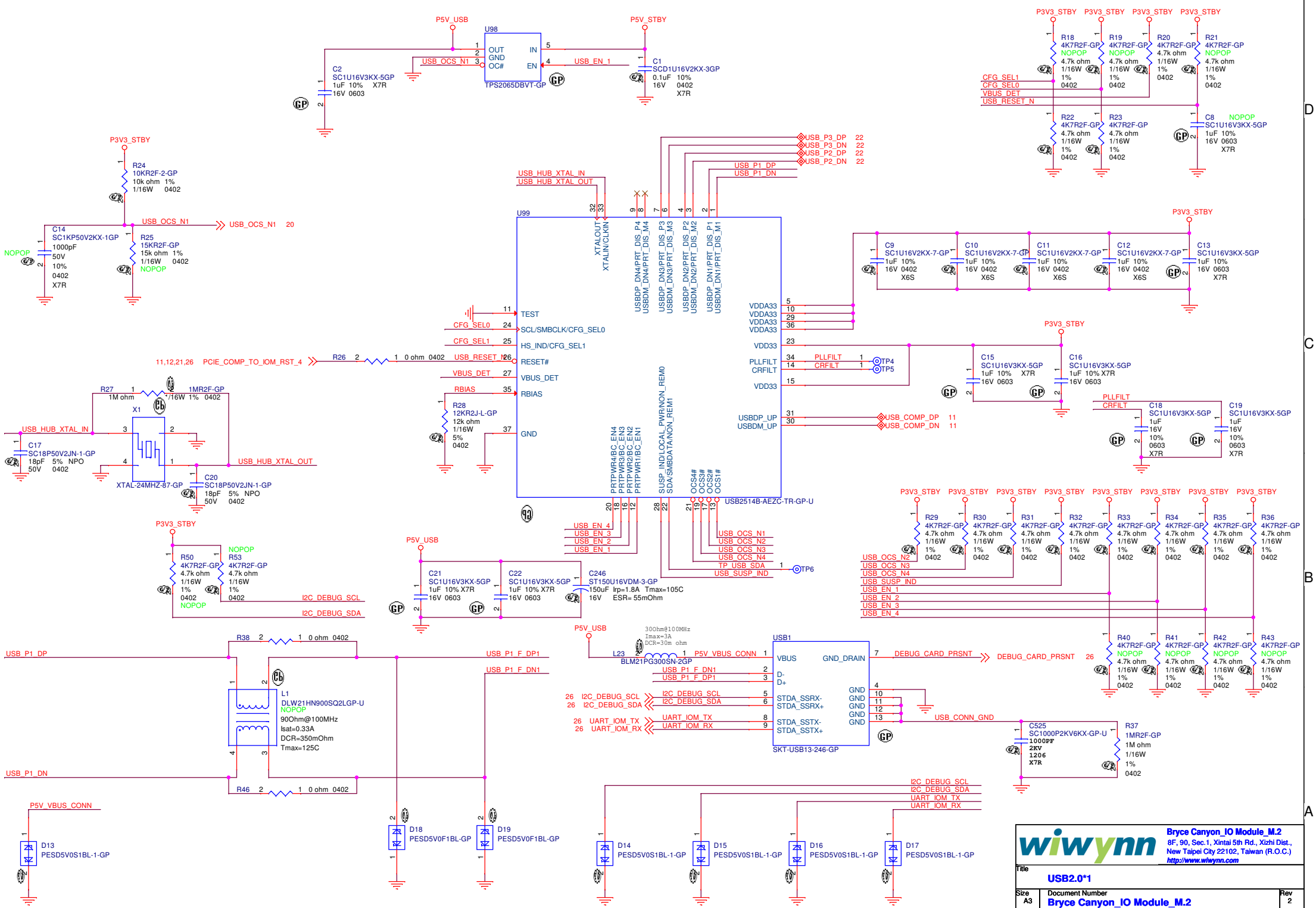

wiwynn

Bryce Canyon_IO Module_M.2
8F, 90, Sec.1, Xintai 5th Rd., Xizhi Dist., New Taipei City 22102, Taiwan (R.O.C.)
http://www.wiwynn.com

Title	USB2.0*1
Size	A3
Document Number	Bryce Canyon_IO Module_M.2
Rev	2
Date:	Friday, December 08, 2017
Sheet	14 of 38

POWER/RESET BUTTON

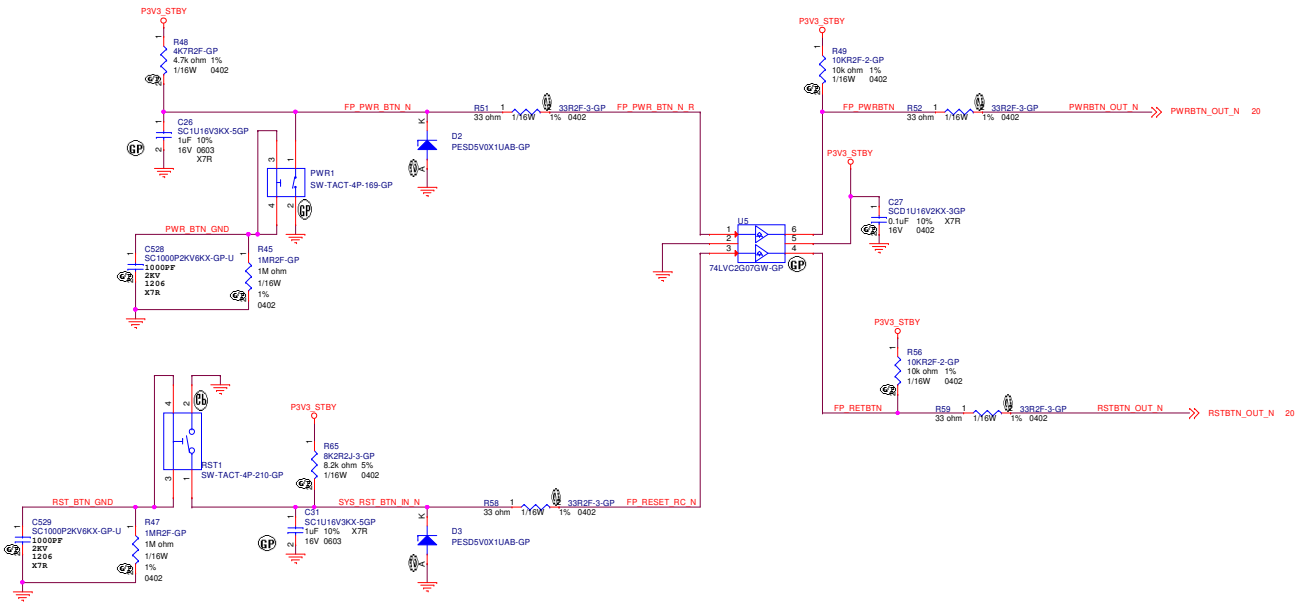

wiwynn	Bryce Canyon_IO Module_M.2 8F,90,Sec,1. Xintai 5th Rd.,Xizhi Dist., New Taipei City 22102, Taiwan(R.O.C) http://wiwynn.com
Title	POWER & RESET BUTTON
Size A2	Document Number: Bryce Canyon_IO Module_M.2 — Rev 2
Date: Friday, December 08, 2017	Sheet 15 of 38

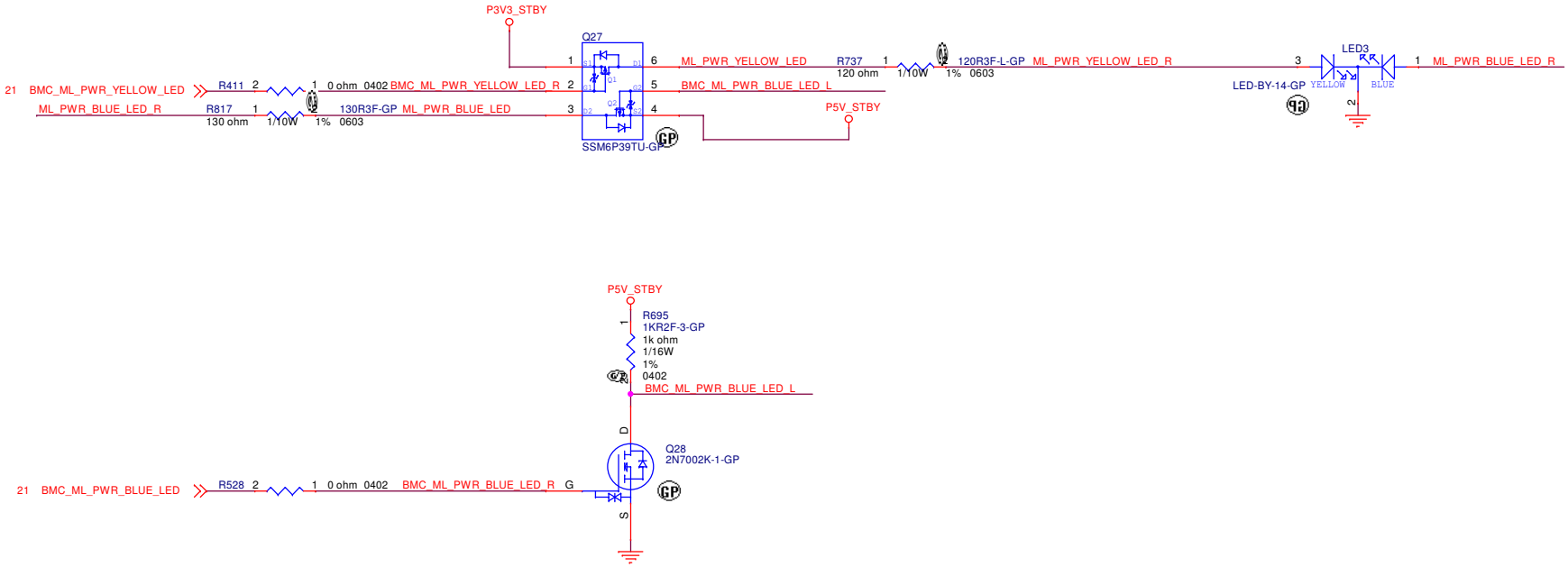

wiwynn	Bryce Canyon_IO Module_M.2 8F, 90, Sec.1, Xintai 5th Rd., Xizhi Dist., New Taipei City 22102, Taiwan (R.O.C.) http://www.wiwynn.com	
Title	RESERVE	
Size A3	Document Number Bryce Canyon_IO Module_M.2	Rev 2
Date: Wednesday, August 09, 2017	Sheet 16 of 38	

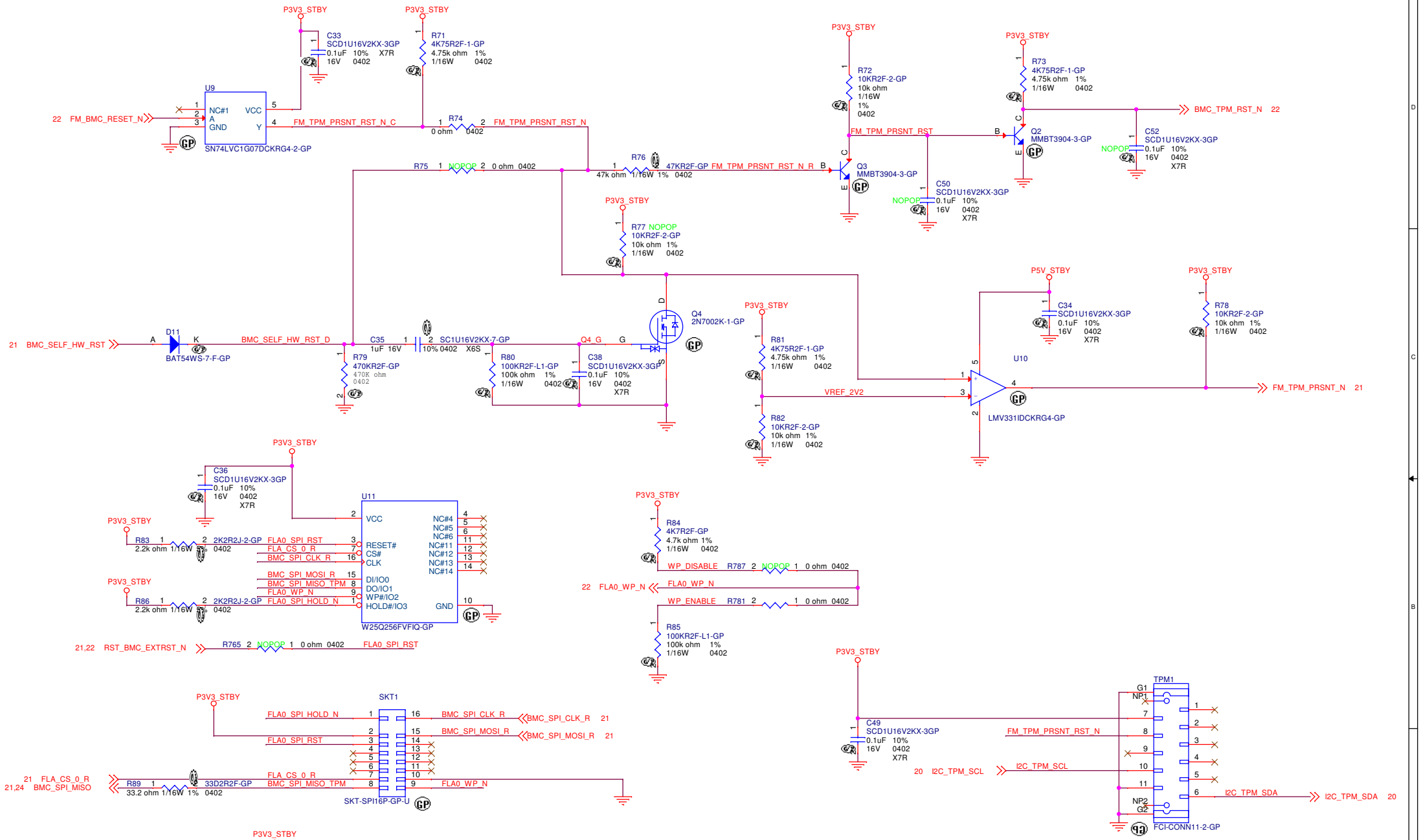

wiwynn

Bryce Canyon_IO Module_M.2
8F, 90, Sec.1, Xintai 5th Rd., Xizhi Dist., New Taipei City 22102, Taiwan (R.O.C.)
http://www.wiwynn.com

Title	POWER/ENCLOUSRE LED	
Size A3	Document Number Bryce Canyon_IO Module_M.2	Rev 2
Date: Friday, December 08, 2017	Sheet 17 of 38	

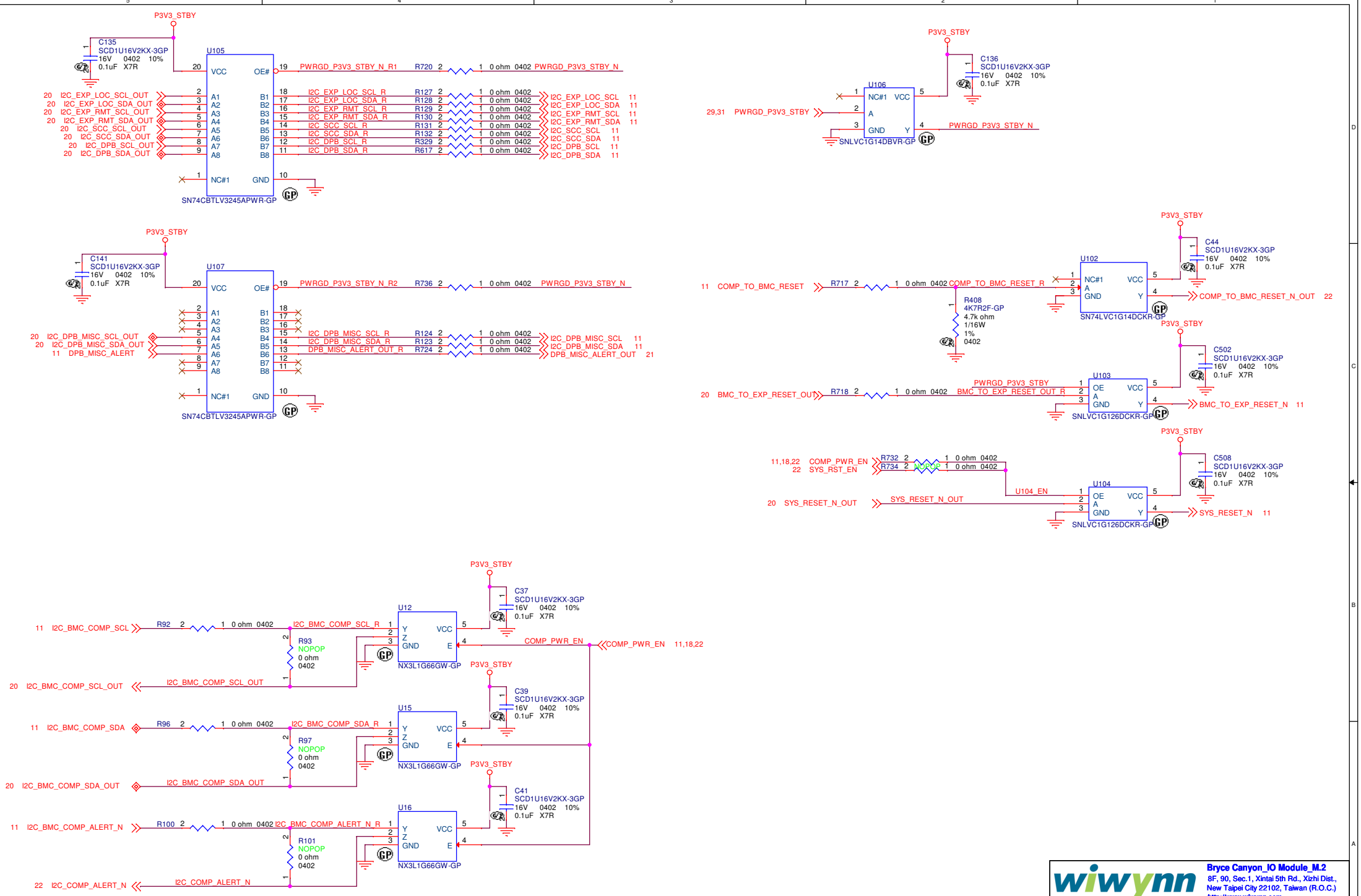

wiwynn

Bryce Canyon_IO Module_M.2
8F, 90, Sec.1, Xintai 5th Rd., Xizhi Dist.,
New Taipei City 22102, Taiwan (R.O.C.)
http://www.wiwynn.com

Title	I2C SWITCH & BUFFER
Size A3	Document Number: Bryce Canyon_IO Module_M.2
Rev	2
Date:	Friday, December 08, 2017
Sheet	18 of 38

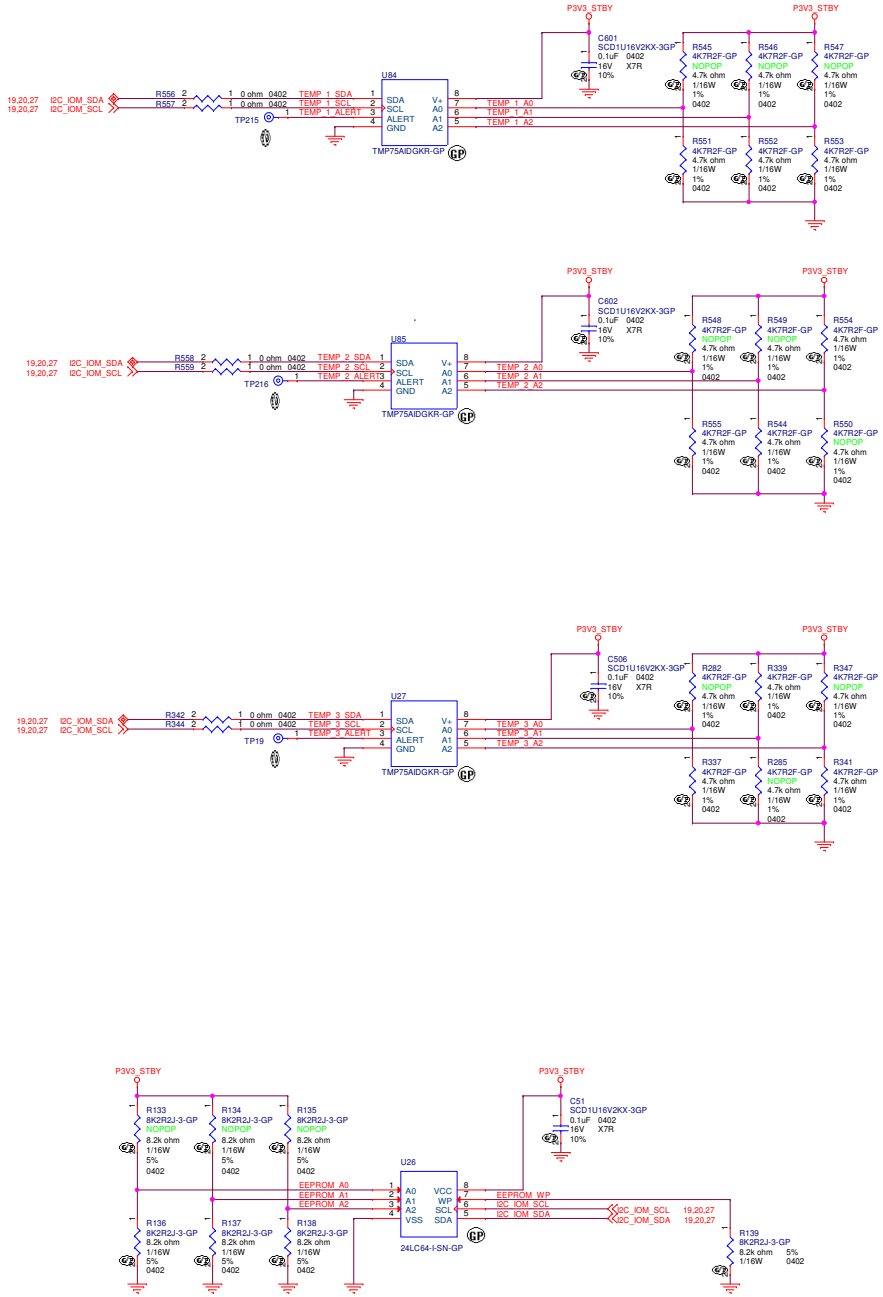

wiwynn

Bryce Canyon_IO Module_M.2
8F, 90, Sec.1, Xintai 5th Rd., Xizhi Dist.,
New Taipei City 22102, Taiwan (R.O.C.)
http://www.wiwynn.com

Title	I2C DEVICES	
Size A2	Document Number Bryce Canyon_IO Module_M.2	Rev 2
Date: Friday, December 08, 2017	Sheet 19 of 38	

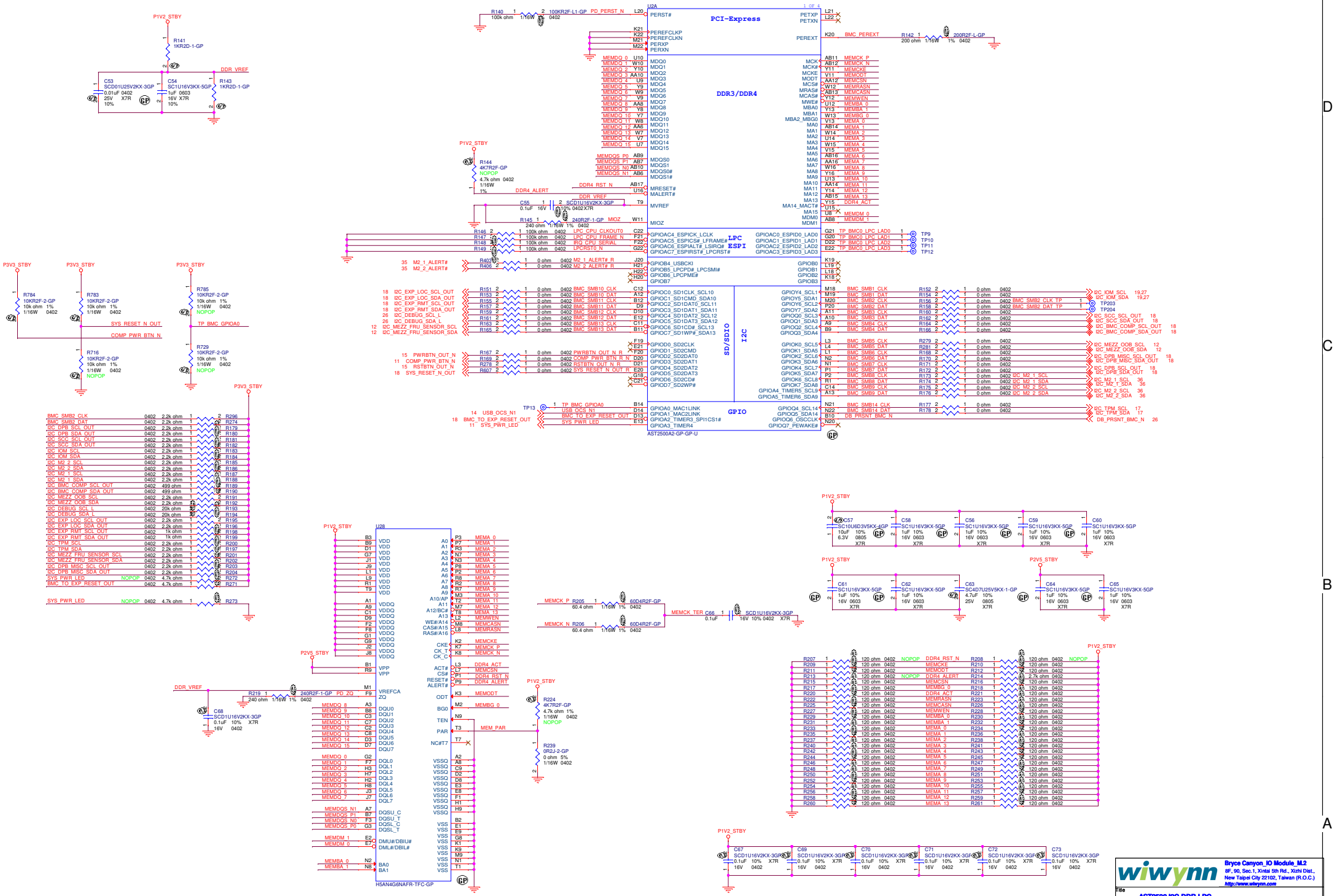
PCI-Express
DDR3/DDR4
LPC
ESPI
SD/SDIO
I2C
GPIO
AST2500A2-GP-GP-U
H5AN4G6NAFR-TFC-GP
P1V2_STBY
P3V3_STBY
P2V5_STBY
DDR_VREF
Bryce Canyon_IO Module_M.2
8F, 90, Sec.1, Xintai 5th Rd., Xizhi Dist.,
New Taipei City 22102, Taiwan (R.O.C.)
http://www.wiwynn.com
Title
AST2500 I2C DDR LPC
Size
A2
Document Number
Bryce Canyon_IO Module_M.2
Rev
2
Date:
Friday, December 08, 2017
Sheet
20
of
38

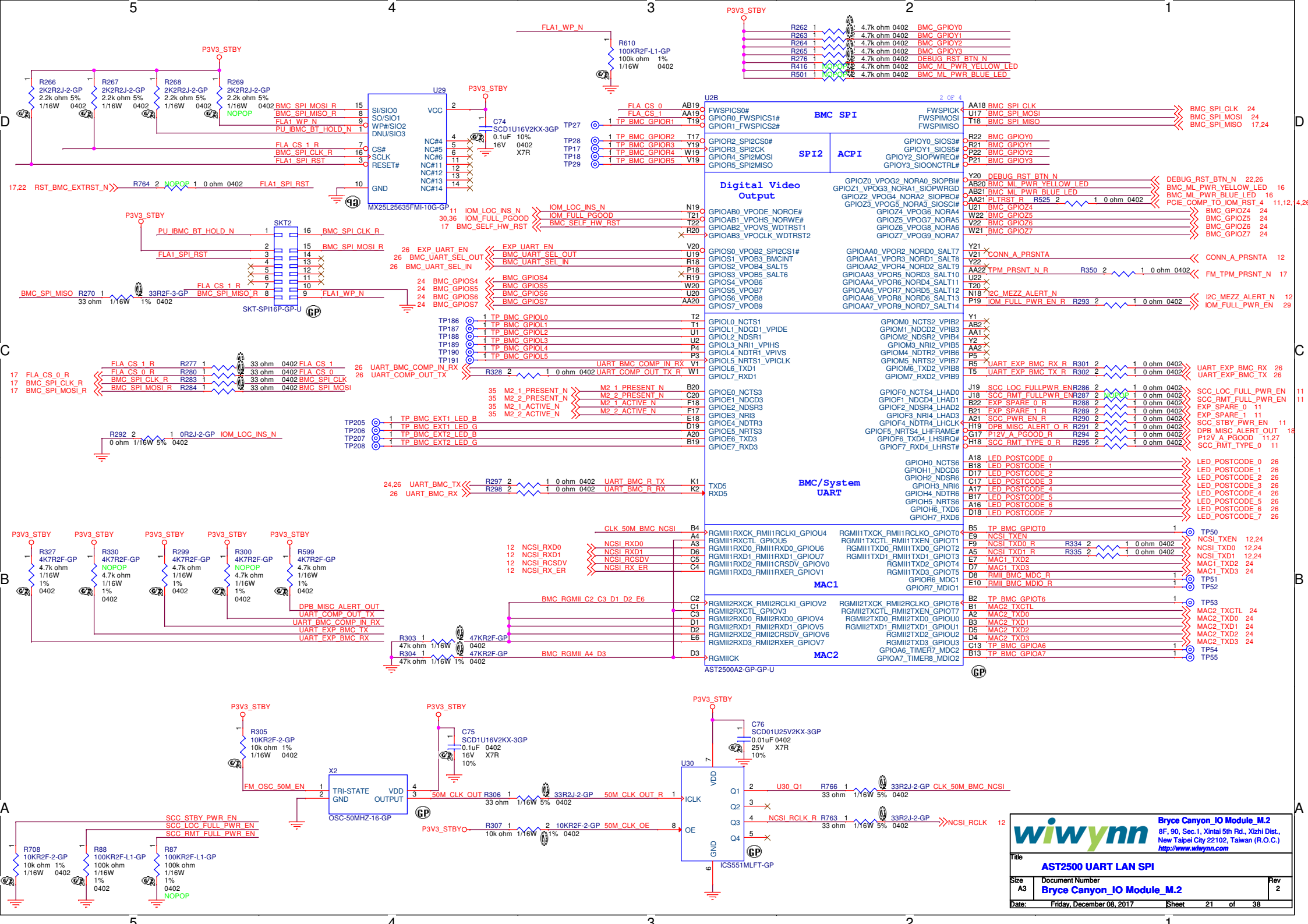
U29
MX25L25635FMI-10G-GP
SI/SIO0
SO/SIO1
WP#/SIO2
DNU/SIO3
CS#
SCLK
RESET#
GND
VCC
U2B
2 OF 4
BMC SPI
SPI2
ACPI
Digital Video Output
BMC/System UART
MAC1
MAC2
AST2500A2-GP-GP-U
SKT2
SKT-SPI16P-GP-U
X2
OSC-50MHZ-16-GP
U30
ICS551MLFT-GP
P3V3_STBY
BMC_SPI_CLK 24
BMC_SPI_MOSI 24
BMC_SPI_MISO 17,24
DEBUG_RST_BTN_N 22,26
BMC_ML_PWR_YELLOW_LED 16
BMC_ML_PWR_BLUE_LED 16
PCIE_COMP_TO_IOM_RST_4 11,12,14,26
CONN_A_PRSNTA 12
FM_TPM_PRSNT_N 17
I2C_MEZZ_ALERT_N 12
IOM_FULL_PWR_EN 29
UART_EXP_BMC_RX 26
UART_EXP_BMC_TX 26
SCC_LOC_FULL_PWR_EN 11
SCC_RMT_FULL_PWR_EN 11
EXP_SPARE_0 11
EXP_SPARE_1 11
SCC_STBY_PWR_EN 11
DPB_MISC_ALERT_OUT 18
P12V_A_PGOOD 11,27
SCC_RMT_TYPE_0 11
LED_POSTCODE_0 26
LED_POSTCODE_1 26
LED_POSTCODE_2 26
LED_POSTCODE_3 26
LED_POSTCODE_4 26
LED_POSTCODE_5 26
LED_POSTCODE_6 26
LED_POSTCODE_7 26
NCSI_TXEN 12,24
NCSI_TXD0 12,24
NCSI_TXD1 12,24
MAC1_TXD2 24
MAC1_TXD3 24
MAC2_TXCTL 24
MAC2_TXD0 24
MAC2_TXD1 24
MAC2_TXD2 24
MAC2_TXD3 24
NCSI_RCLK 12
wiwynn
Bryce Canyon_IO Module_M.2
8F, 90, Sec.1, Xintai 5th Rd., Xizhi Dist., New Taipei City 22102, Taiwan (R.O.C.)
http://www.wiwynn.com
Title
AST2500 UART LAN SPI
Size A3
Document Number
Bryce Canyon_IO Module_M.2
Rev 2
Date: Friday, December 08, 2017
Sheet 21 of 38

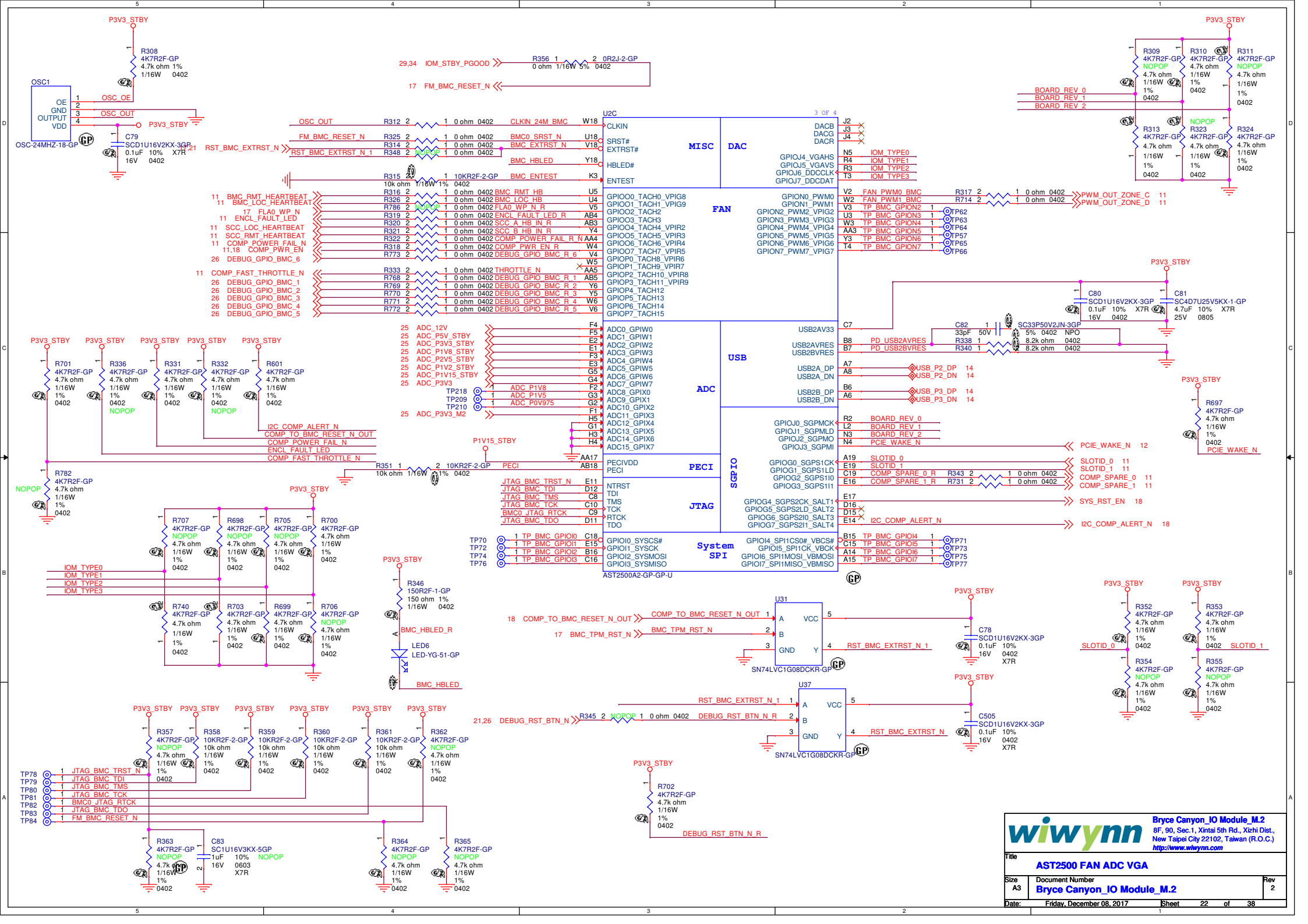
U2C
3 OF 4
MISC
DAC
FAN
USB
ADC
PECI
JTAG
SGPIO
System SPI
AST2500A2-GP-GP-U
OSC1
OSC-24MHZ-18-GP
SN74LVC1G08DCKR-GP
U31
U37
LED6
LED-YG-51-GP
P3V3_STBY
P1V15_STBY
29,34 IOM_STBY_PGOOD
17 FM_BMC_RESET_N
BOARD_REV_0
BOARD_REV_1
BOARD_REV_2
PWM_OUT_ZONE_C 11
PWM_OUT_ZONE_D 11
USB_P2_DP 14
USB_P2_DN 14
USB_P3_DP 14
USB_P3_DN 14
PCIE_WAKE_N 12
SLOTID_0 11
SLOTID_1 11
COMP_SPARE_0 11
COMP_SPARE_1 11
SYS_RST_EN 18
I2C_COMP_ALERT_N 18
18 COMP_TO_BMC_RESET_N_OUT
17 BMC_TPM_RST_N
21,26 DEBUG_RST_BTN_N
BMC_HBLED
DEBUG_RST_BTN_N_R
Bryce Canyon_IO Module_M.2
8F, 90, Sec.1, Xintai 5th Rd., Xizhi Dist.,
New Taipei City 22102, Taiwan (R.O.C.)
http://www.wiwynn.com
Title
AST2500 FAN ADC VGA
Size A3
Document Number
Bryce Canyon_IO Module_M.2
Rev 2
Date: Friday, December 08, 2017
Sheet 22 of 38

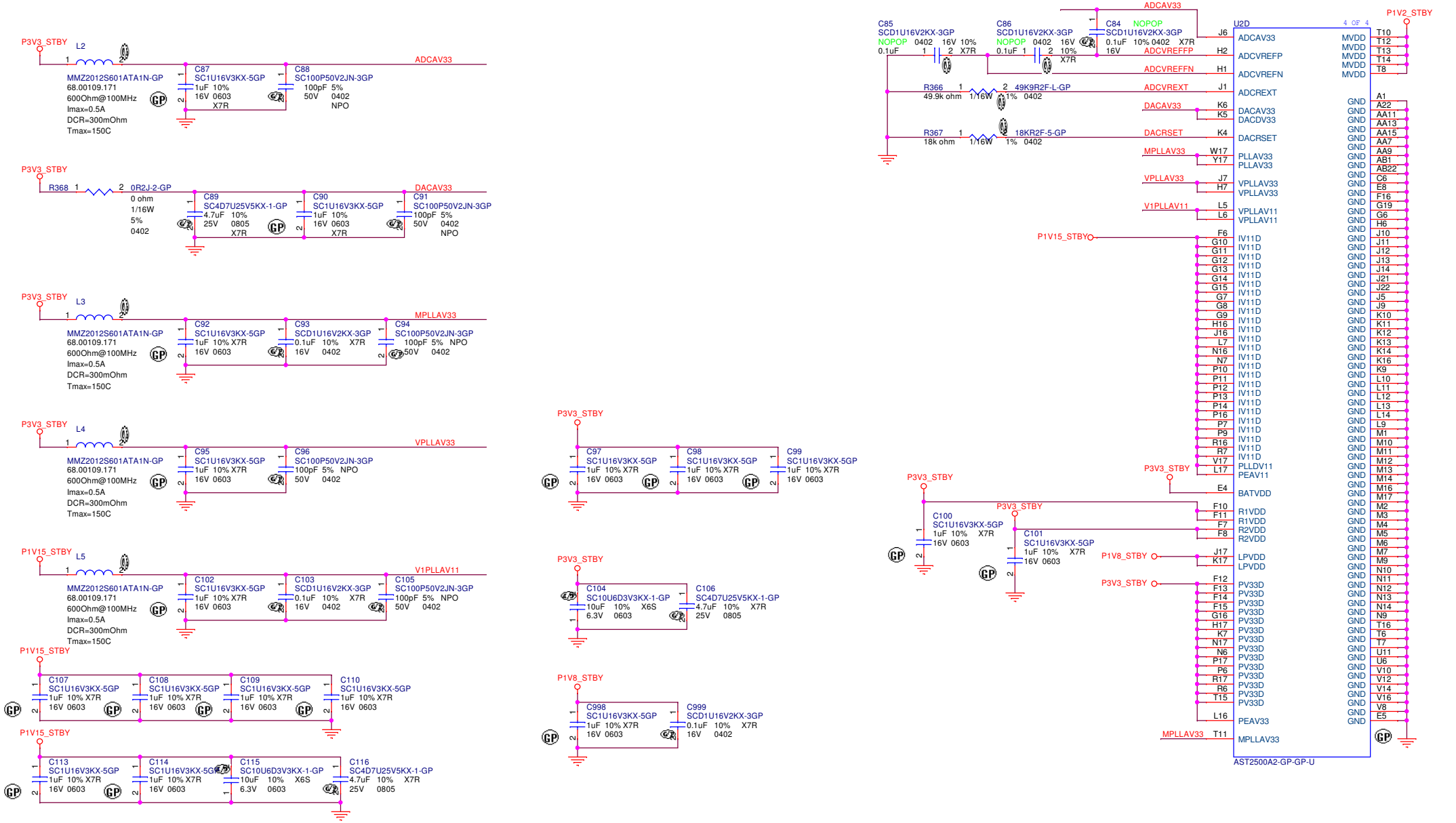

wiwynn

Bryce Canyon_IO Module_M.2
8F, 90, Sec.1, Xintai 5th Rd., Xizhi Dist.,
New Taipei City 22102, Taiwan (R.O.C.)
http://www.wiwynn.com

Title	AST2500 Power	
Size A3	Document Number Bryce Canyon_IO Module_M.2	Rev 2
Date: Friday, December 08, 2017	Sheet 23 of 38	

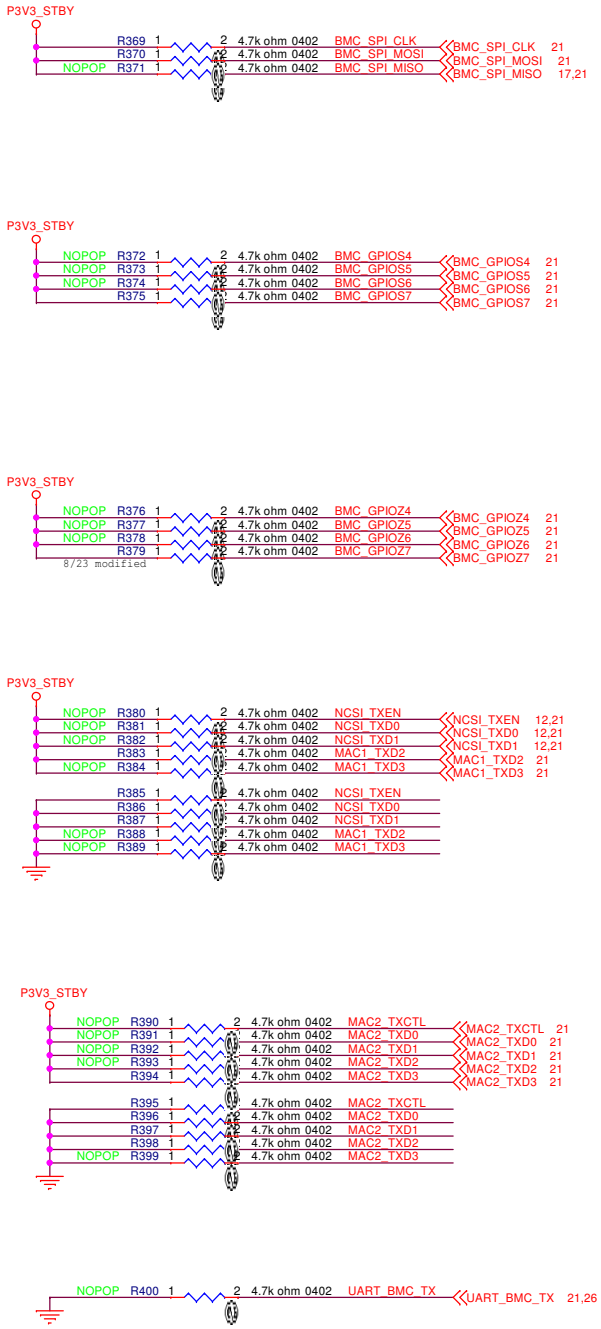

wiwynn

Bryce Canyon_IO Module_M.2
8F, 90, Sec.1, Xintai 5th Rd., Xizhi Dist.,
New Taipei City 22102, Taiwan (R.O.C.)
http://www.wiwynn.com

Title	AST2500 STRAPPING	
Size A3	Document Number Bryce Canyon_IO Module_M.2	Rev 2
Date: Friday, December 08, 2017	Sheet 24 of 38	

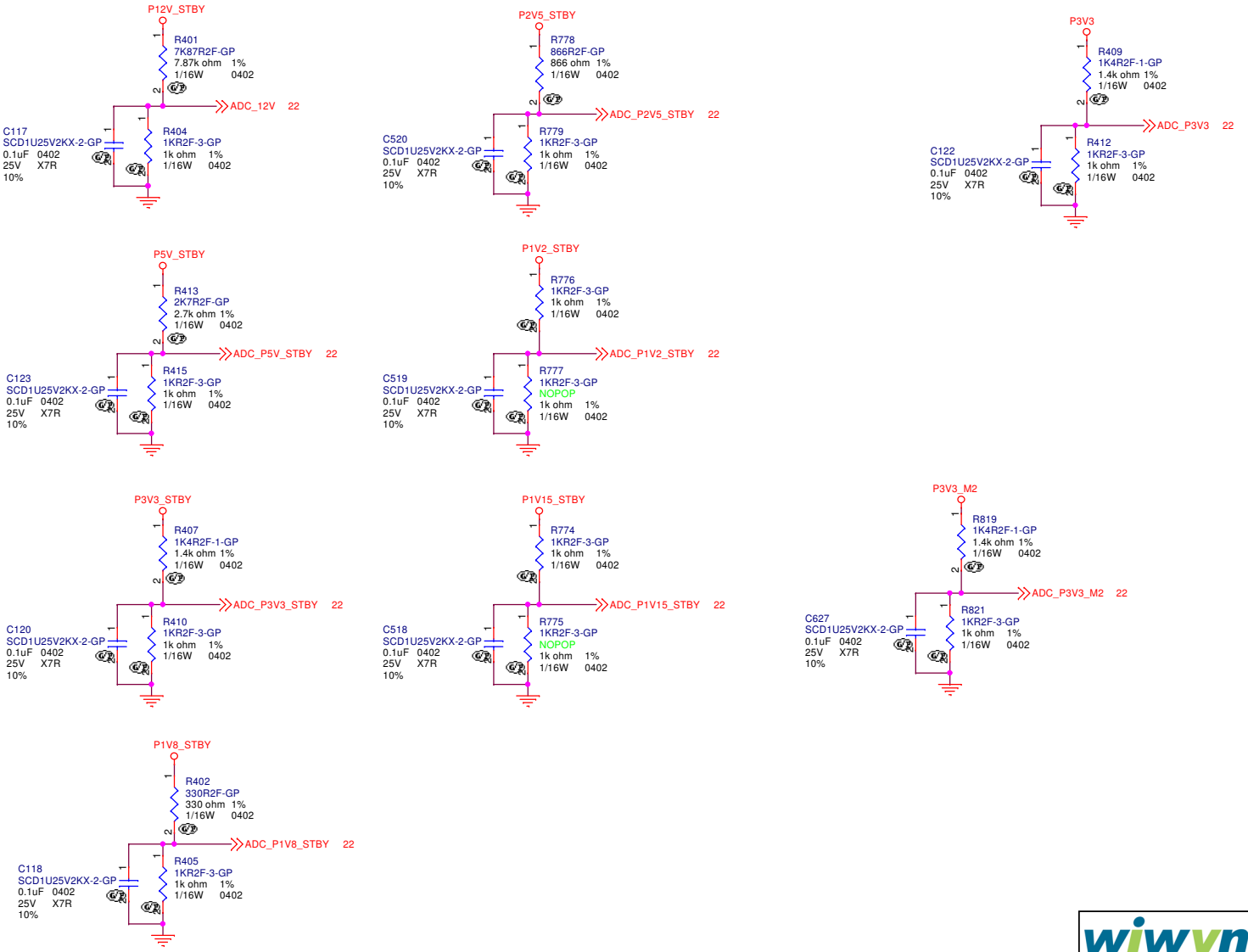

wiwynn

Bryce Canyon_IO Module_M.2
8F, 90, Sec.1, Xintai 5th Rd., Xizhi Dist.,
New Taipei City 22102, Taiwan (R.O.C.)
http://www.wiwynn.com

Title: AST2500 VOLTAGE SENSE

Size: A3 | Document Number: Bryce Canyon_IO Module_M.2 | Rev: 2

Date: Friday, December 08, 2017 | Sheet 25 of 38

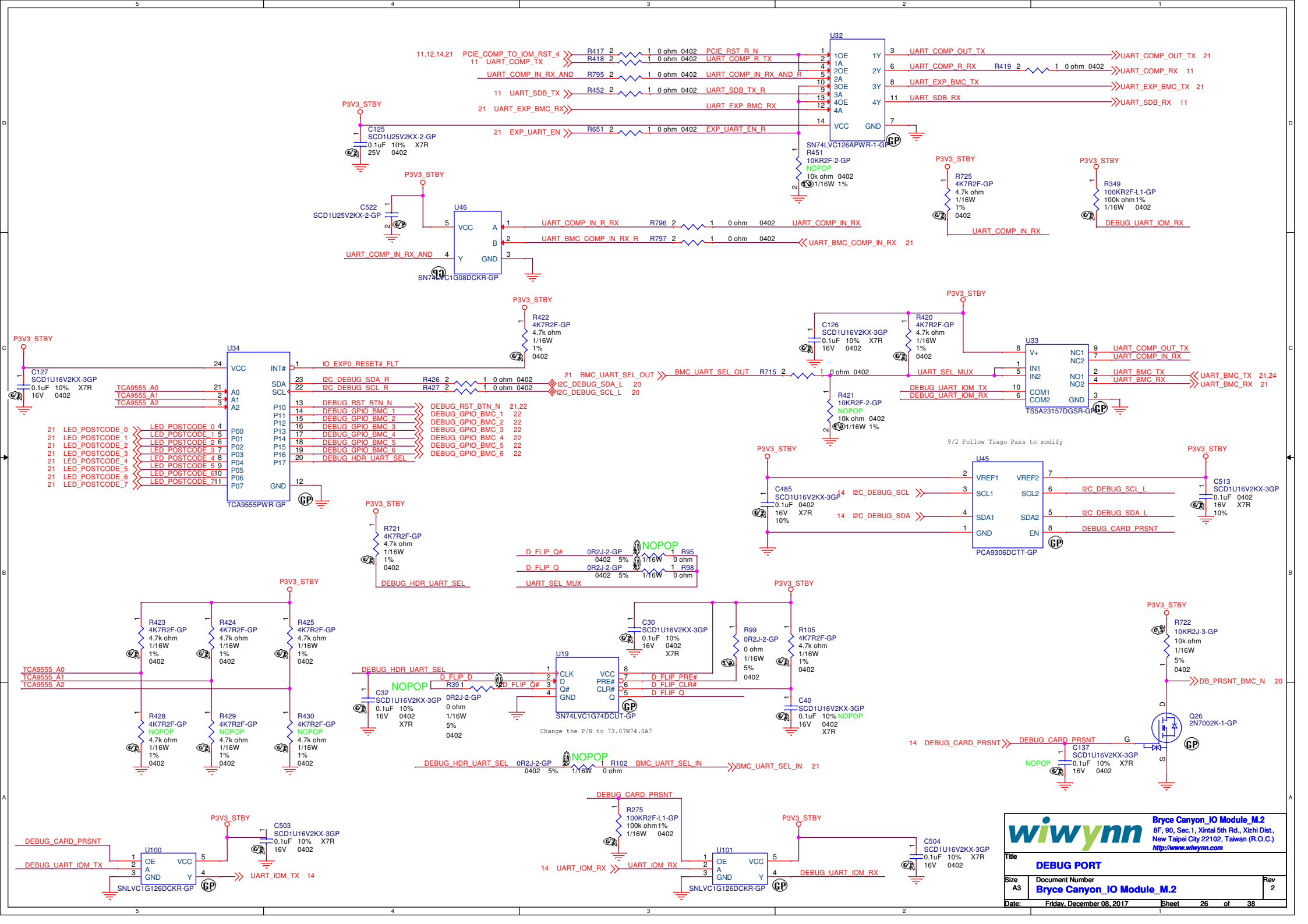
U32
SN74LVC126APWR-1-GP
PCIE_COMP_TO_IOM_RST_4
UART_COMP_TX
UART_COMP_IN_RX_AND
UART_SDB_TX
UART_EXP_BMC_RX
EXP_UART_EN
PCIE_RST_R_N
UART_COMP_R_TX
UART_COMP_IN_RX_AND_R
UART_SDB_TX_R
UART_EXP_BMC_RX
EXP_UART_EN_R
UART_COMP_OUT_TX
UART_COMP_R_RX
UART_EXP_BMC_TX
UART_SDB_RX
UART_COMP_RX
R451
10KR2F-2-GP
NOPOP
10k ohm 0402
1/16W 1%
U46
SN74LVC1G08DCKR-GP
UART_COMP_IN_R_RX
UART_BMC_COMP_IN_R_R
UART_BMC_COMP_IN_RX
UART_COMP_IN_RX
R725
4K7R2F-GP
4.7k ohm
1/16W
1%
0402
R349
100KR2F-L1-GP
100k ohm1%
1/16W 0402
DEBUG_UART_IOM_RX
U34
TCA9555PWR-GP
IO_EXP0_RESET#_FLT
I2C_DEBUG_SDA_R
I2C_DEBUG_SCL_R
DEBUG_RST_BTN_N
DEBUG_GPIO_BMC_1
DEBUG_GPIO_BMC_2
DEBUG_GPIO_BMC_3
DEBUG_GPIO_BMC_4
DEBUG_GPIO_BMC_5
DEBUG_GPIO_BMC_6
DEBUG_HDR_UART_SEL
LED_POSTCODE_0
LED_POSTCODE_1
LED_POSTCODE_2
LED_POSTCODE_3
LED_POSTCODE_4
LED_POSTCODE_5
LED_POSTCODE_6
LED_POSTCODE_7
TCA9555_A0
TCA9555_A1
TCA9555_A2
BMC_UART_SEL_OUT
UART_SEL_MUX
DEBUG_UART_IOM_TX
DEBUG_UART_IOM_RX
U33
TS5A23157DGSR-GP
UART_BMC_TX
UART_BMC_RX
R715
R421
10KR2F-2-GP
NOPOP
10k ohm 0402
1/16W 1%
9/2 Follow Tiago Pass to modify
U45
PCA9306DCTT-GP
I2C_DEBUG_SCL
I2C_DEBUG_SDA
I2C_DEBUG_SCL_L
I2C_DEBUG_SDA_L
DEBUG_CARD_PRSNT
R721
4K7R2F-GP
4.7k ohm
1/16W
1%
0402
D_FLIP_Q#
D_FLIP_Q
R95
R98
0R2J-2-GP
0402 5%
1/16W 0 ohm
R423
R424
R425
R428
R429
R430
4K7R2F-GP
4.7k ohm
1/16W
1%
0402
NOPOP
U19
SN74LVC1G74DCUT-GP
D_FLIP_D
D_FLIP_PRE#
D_FLIP_CLR#
R39 1
0R2J-2-GP
0 ohm
1/16W
5%
0402
Change the P/N to 73.07W74.0A7
R102
BMC_UART_SEL_IN
R722
10KR2J-3-GP
10k ohm
1/16W
5%
0402
DB_PRSNT_BMC_N
Q26
2N7002K-1-GP
C137
SCD1U16V2KX-3GP
0.1uF 10% X7R
16V 0402
U100
SNLVC1G126DCKR-GP
UART_IOM_TX
U101
UART_IOM_RX
R275
100KR2F-L1-GP
100k ohm1%
1/16W 0402
C503
C504
SCD1U16V2KX-3GP
0.1uF 10% X7R
16V 0402
P3V3_STBY
Bryce Canyon_IO Module_M.2
8F, 90, Sec.1, Xintai 5th Rd., Xizhi Dist.,
New Taipei City 22102, Taiwan (R.O.C.)
http://www.wiwynn.com
Title
DEBUG PORT
Size A3
Document Number
Bryce Canyon_IO Module_M.2
Rev 2
Date: Friday, December 08, 2017
Sheet 26 of 38

Controller : ADM1278
TDC :7.29A
OCP :10.77A

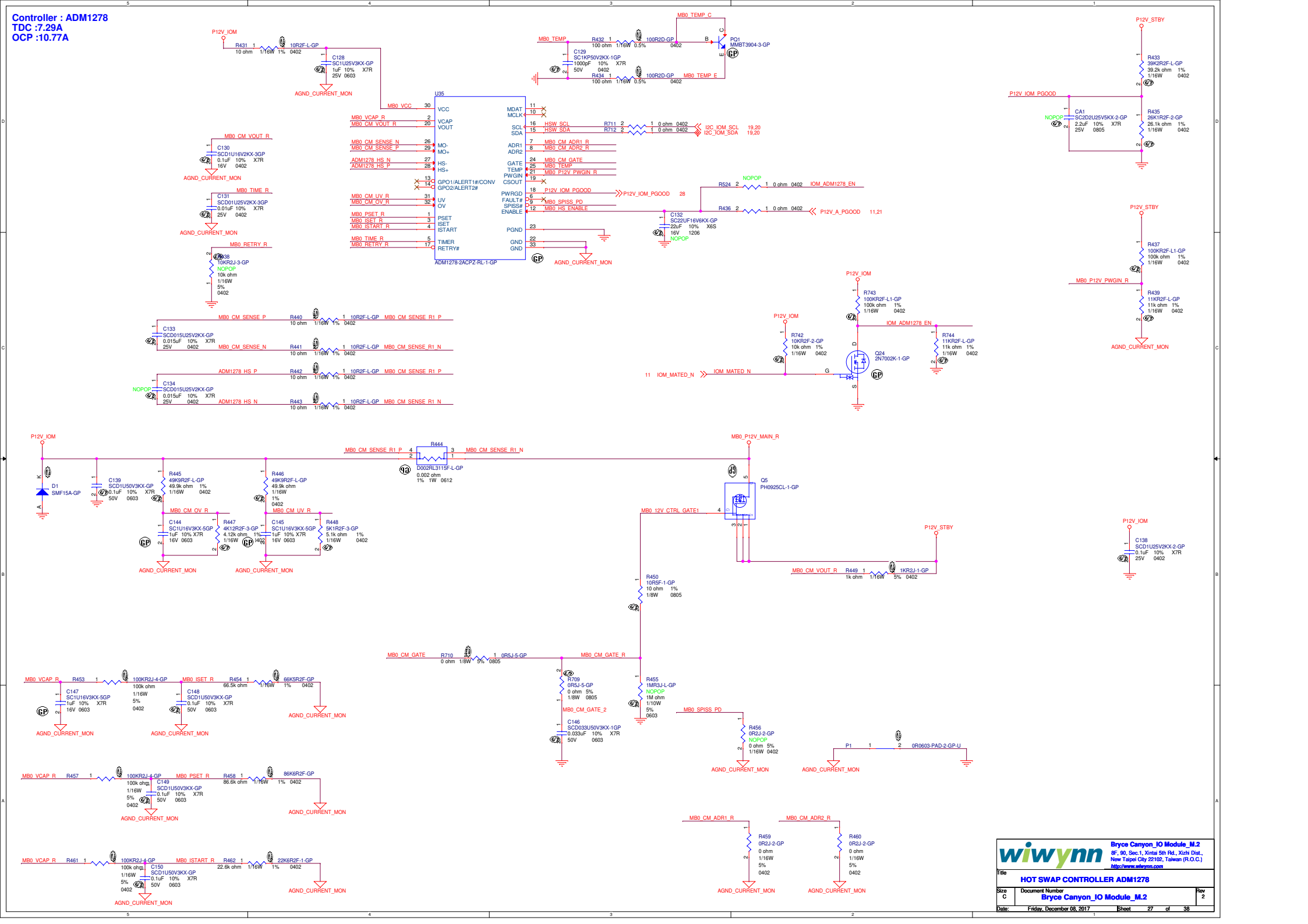

wiwynn	Bryce Canyon_IO Module_M.2 8F, 90, Sec.1, Xintai 5th Rd., Xizhi Dist., New Taipei City 22102, Taiwan (R.O.C.) http://www.wiwynn.com	
Title	HOT SWAP CONTROLLER ADM1278	
Size C	Document Number Bryce Canyon_IO Module_M.2	Rev 2
Date: Friday, December 08, 2017	Sheet 27 of 38	

Power rail : P5V_STBY
Controller : TPS53318 (Fswitching=500KHz)
TDC : 3.4A
MAX : 3.4A
OCP : 5.1A

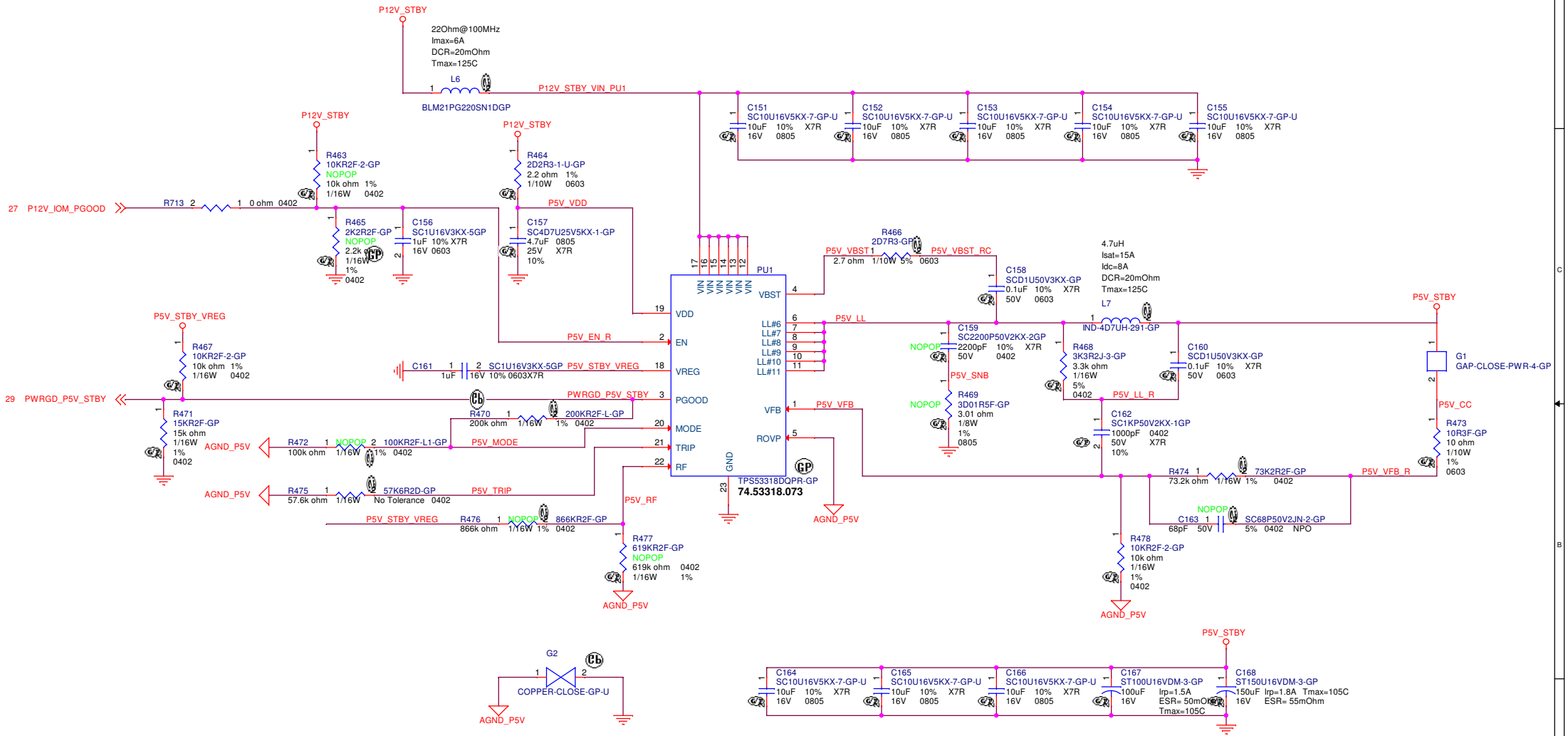

wiwynn

Bryce Canyon_IO Module_M.2
8F, 90, Sec.1, Xintai 5th Rd., Xizhi Dist., New Taipei, Taiwan
http://www.wiwynn.com

Title	PWRSW_P5V_STBY_TPS53319
Size	A3
Document Number	Bryce Canyon_IO Module_M.2
Rev	2
Date:	Friday, December 08, 2017
Sheet	28 of 38

Power rail : P3V3_STBY
Controller : TPS53318 (Fswitching=500KHz)
TDC : 3A
MAX : 3A
OCP : 5.3A

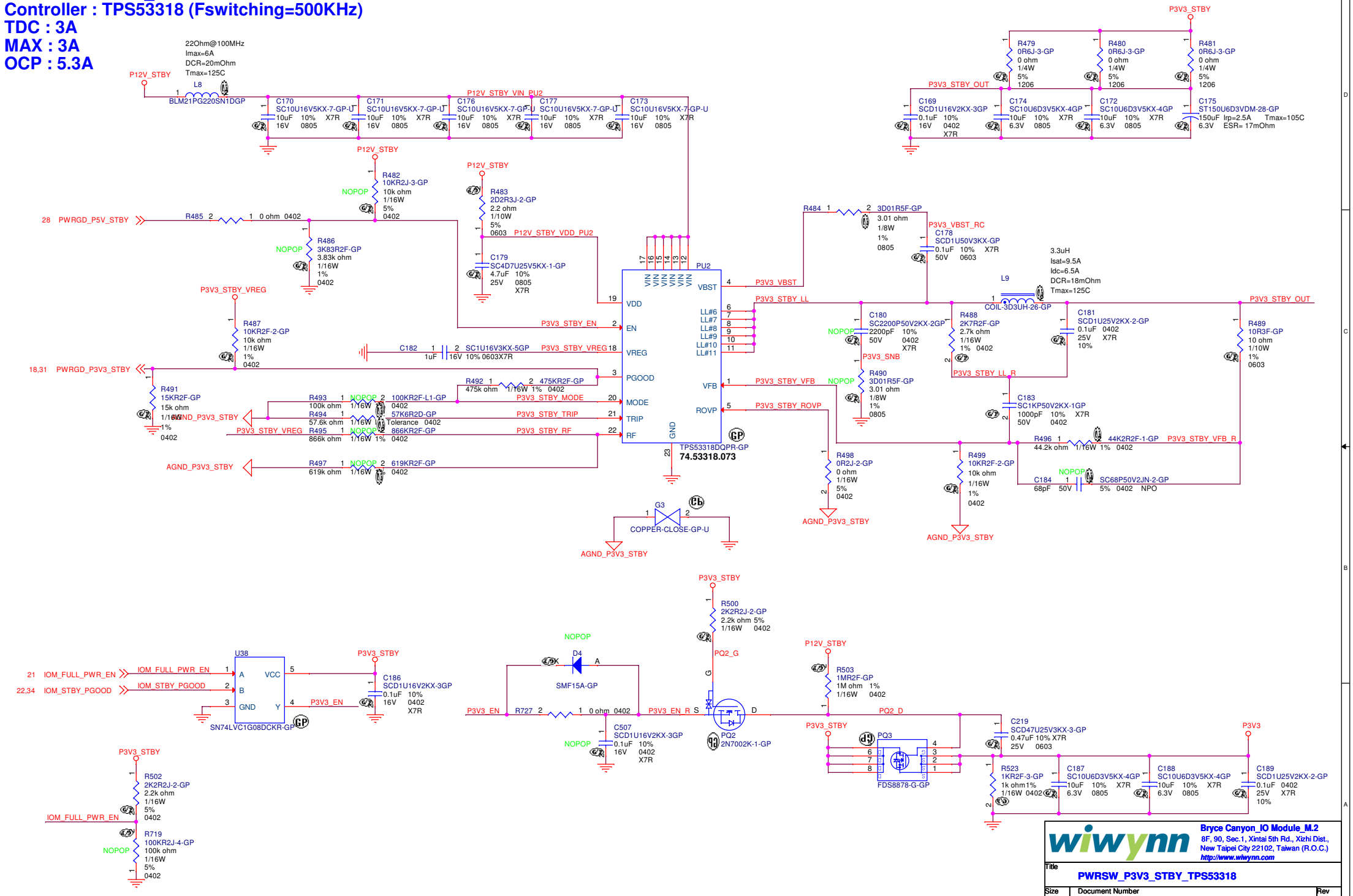

wiwynn	Bryce Canyon_IO Module_M.2 8F, 90, Sec.1, Xintai 5th Rd., Xizhi Dist., New Taipei City 22102, Taiwan (R.O.C.) http://www.wiwynn.com
Title	PWRSW_P3V3_STBY_TPS53318
Size A3	Document Number: Bryce Canyon_IO Module_M.2 — Rev 2
Date: Friday, December 08, 2017	Sheet 29 of 38

Power rail : P3V3_M2
Controller : TPS53319 (Fswitching=750KHz)
TDC : 9A
MAX : 9A
OCP : 13A

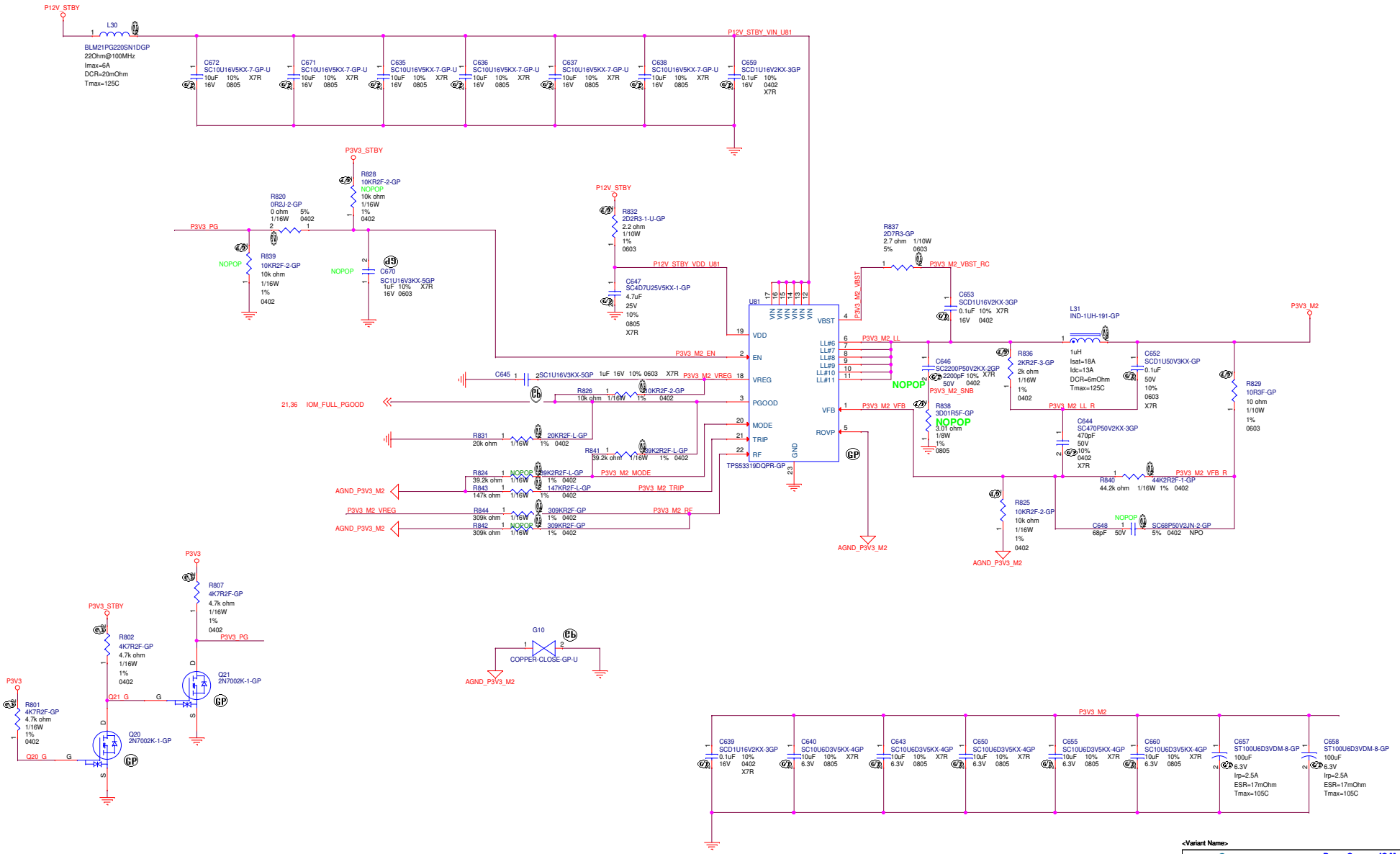

<Variant Name>

wiwynn

Bryce Canyon_IO Module_M.2
8F, 90, Sec.1, Xintai 5th Rd., Xizhi Dist., New Taipei, Taiwan
http://www.wiwynn.com

Title: PWRSW P3V3_M2_TPS53319

Size	Document Number	Rev
C	Bryce Canyon_IO Module_M.2	2

Date: Friday, December 08, 2017 Sheet 30 of 38

Power rail :P2V5_STBY(2.5V)
Controller :TPS74801
TDC :0.2A
Max :0.2A
OCP:2A

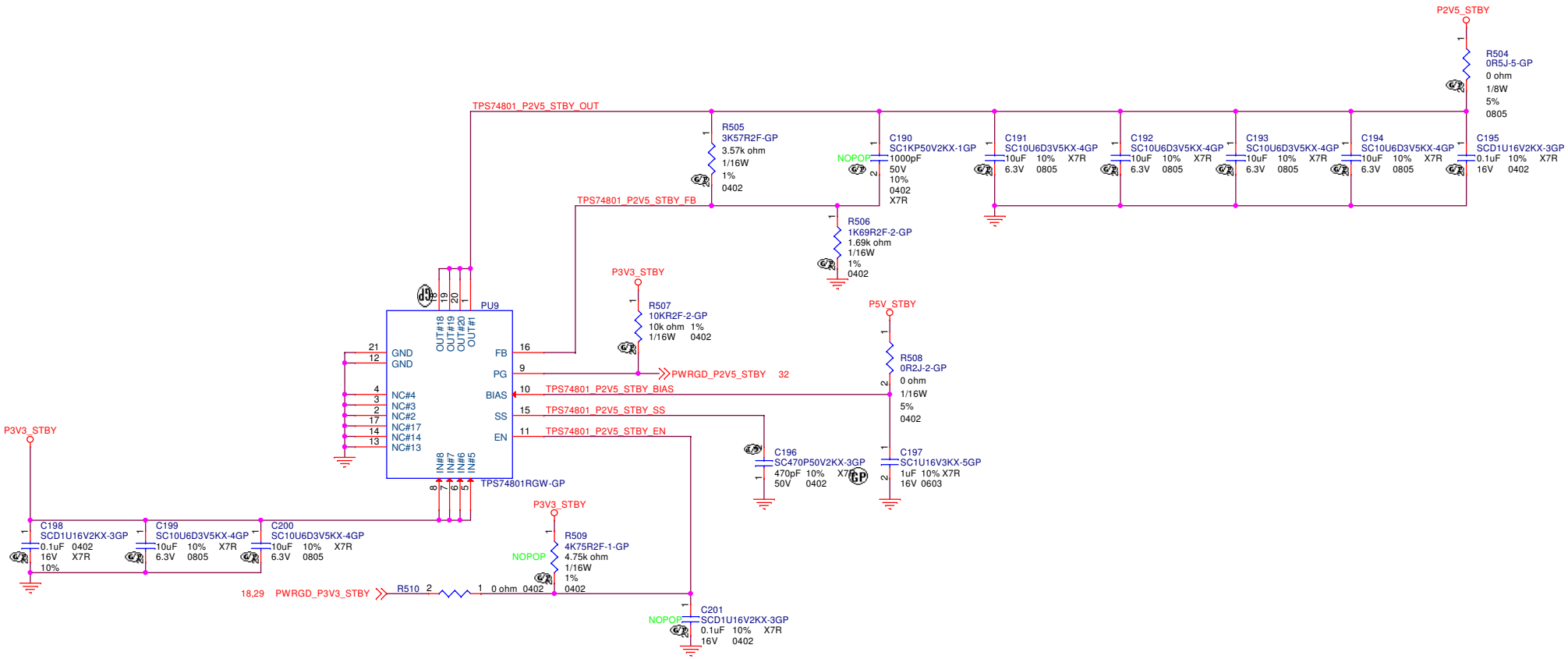

wiwynn	Bryce Canyon_IO Module_M.2 8F, 90, Sec.1, Xintai 5th Rd., Xizhi Dist., New Taipei City 22102, Taiwan (R.O.C.) http://www.wiwynn.com	
Title	PWRLDO_P2V5_STBY_TPS74801	
Size A3	Document Number Bryce Canyon_IO Module_M.2	Rev 2
Date: Friday, December 08, 2017	Sheet 31 of 38	

Power rail : P1V8_STBY
Controller : TPS53312(Fswitching=700KHz)
TDC : 2.178A
MAX : 2.178A
OCP : 4.1A

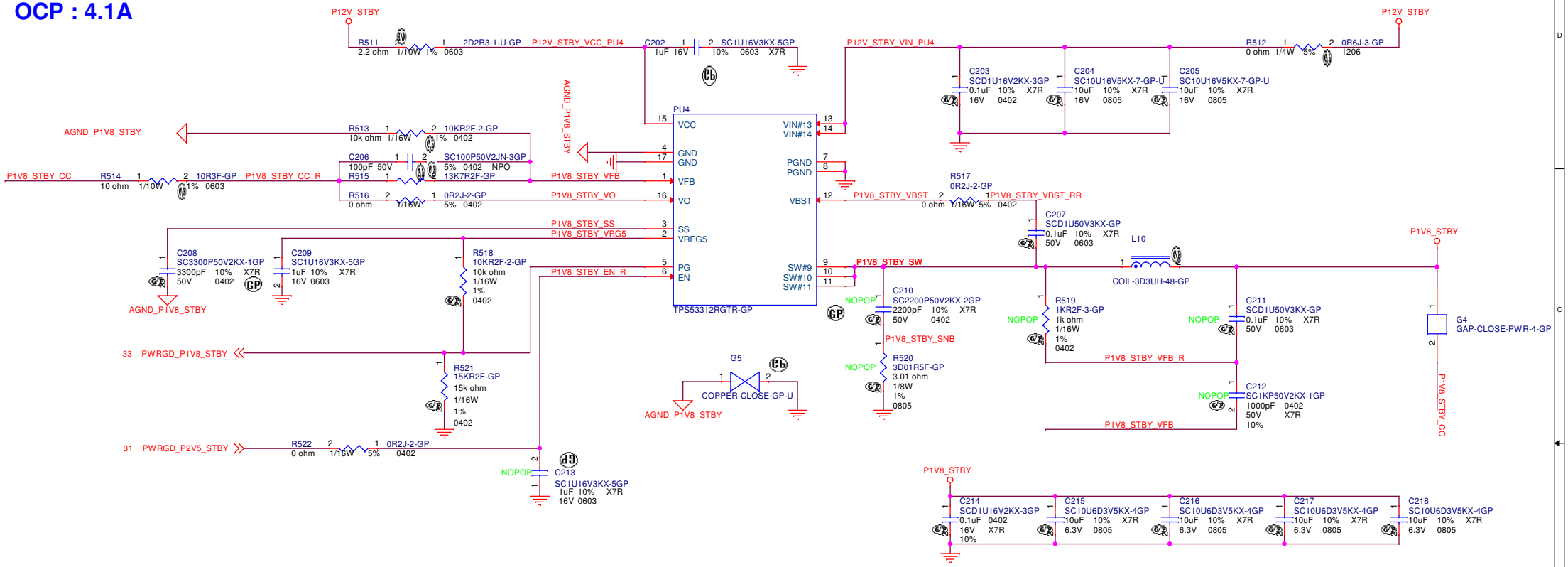

wiwynn

Bryce Canyon_IO Module_M.2
8F, 90, Sec.1, Xintai 5th Rd., Xizhi Dist., New Taipei, Taiwan
http://www.wiwynn.com

Title	PWRSW_P1V8_STBY_TPS53312	
Size A3	Document Number Bryce Canyon_IO Module_M.2	Rev 2
Date: Friday, December 08, 2017	Sheet 32 of 38	

Power rail :P1V2_STBY(1.2V)
Controller :TPS74801
TDC :0.495A
Max :0.495A
OCP:2A

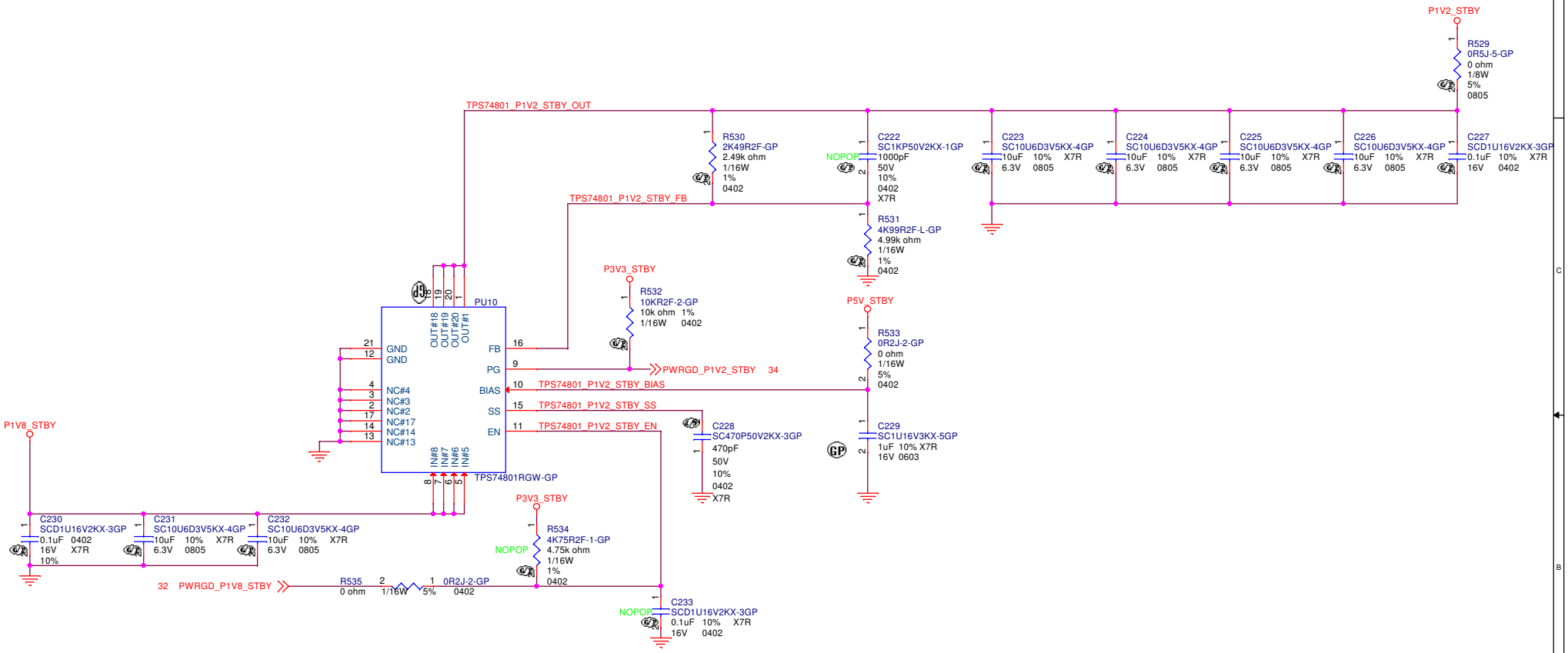

wiwynn

Bryce Canyon_IO Module_M.2
8F, 90, Sec.1, Xintai 5th Rd., Xizhi Dist.,
New Taipei City 22102, Taiwan (R.O.C.)
http://www.wiwynn.com

Title	PWRLDO_P1V2_STBY_TPS74801
Size A3	Document Number: Bryce Canyon_IO Module_M.2
Rev	2
Date:	Friday, December 08, 2017
Sheet	33 of 38

Power rail :P1V15_STBY(1.15V)
Controller :TPS74801
TDC :0.663A
Max :0.663A
OCP:2A

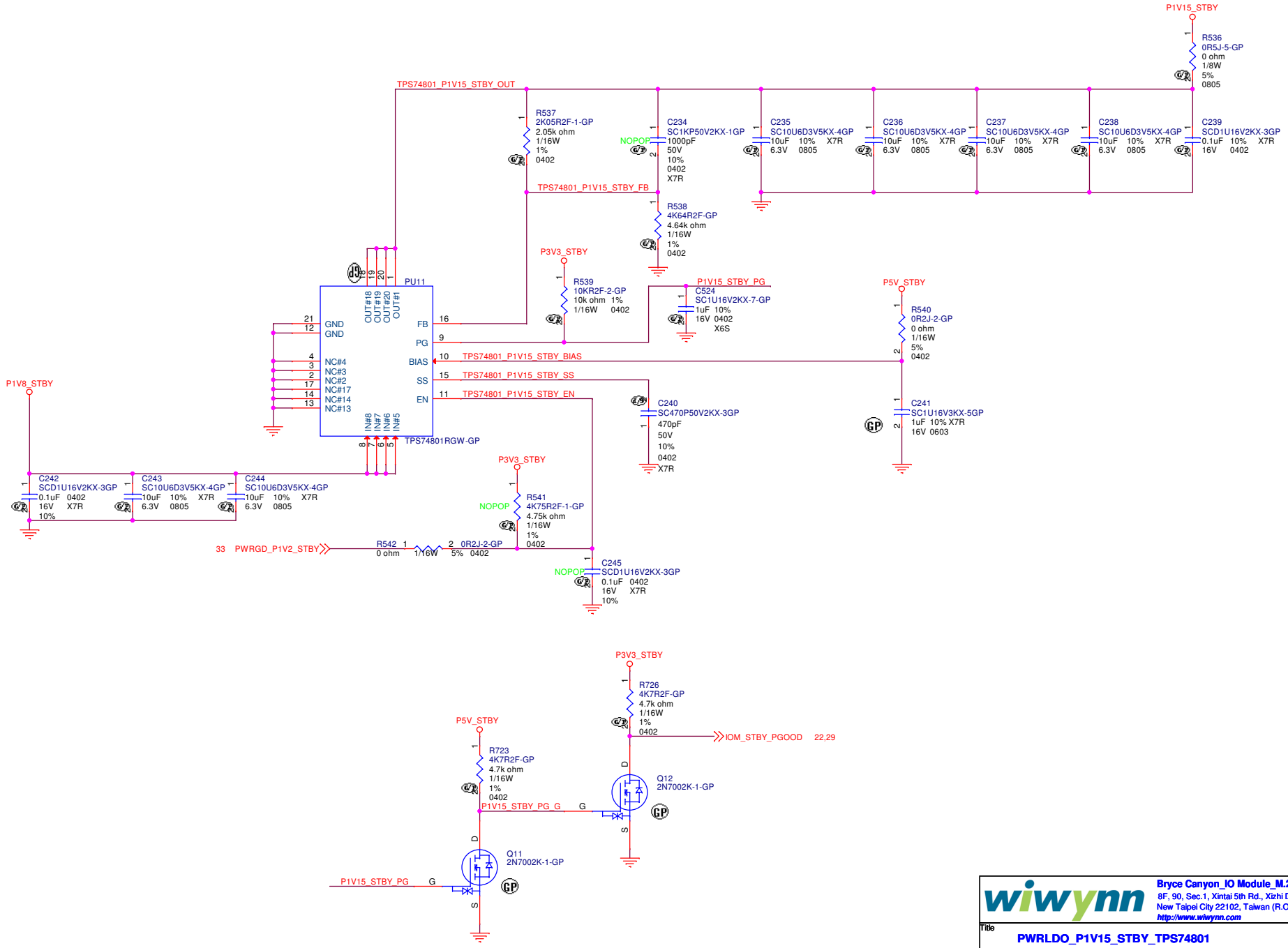

wiwynn

Bryce Canyon_IO Module_M.2
8F, 90, Sec.1, Xintai 5th Rd., Xizhi Dist.,
New Taipei City 22102, Taiwan (R.O.C.)
http://www.wiwynn.com

Title	PWRLDO_P1V15_STBY_TPS74801
Size A3	Document Number: Bryce Canyon_IO Module_M.2
Rev	2
Date: Friday, December 08, 2017	Sheet 34 of 38

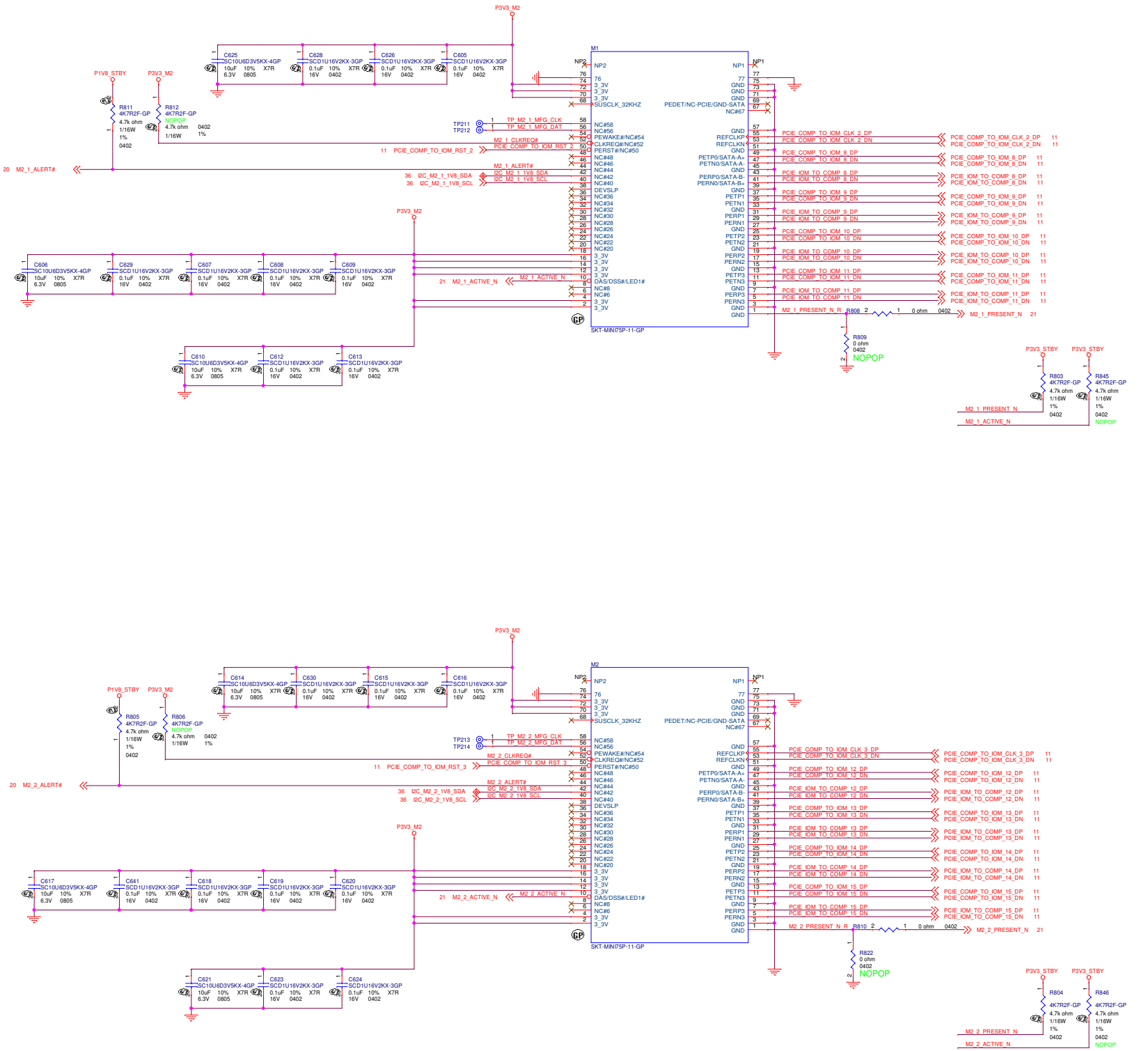

wiwynn

Bryce Canyon_IO Module_M.2
8F, 90, Sec.1, Xintai 5th Rd., Xizhi Dist., New Taipei City 22102, Taiwan (R.O.C.)
http://www.wiwynn.com

Title: M.2 connector

Size	Document Number	Rev
A2	Bryce Canyon_IO Module_M.2	2

Date: Friday, December 08, 2017 Sheet 35 of 38

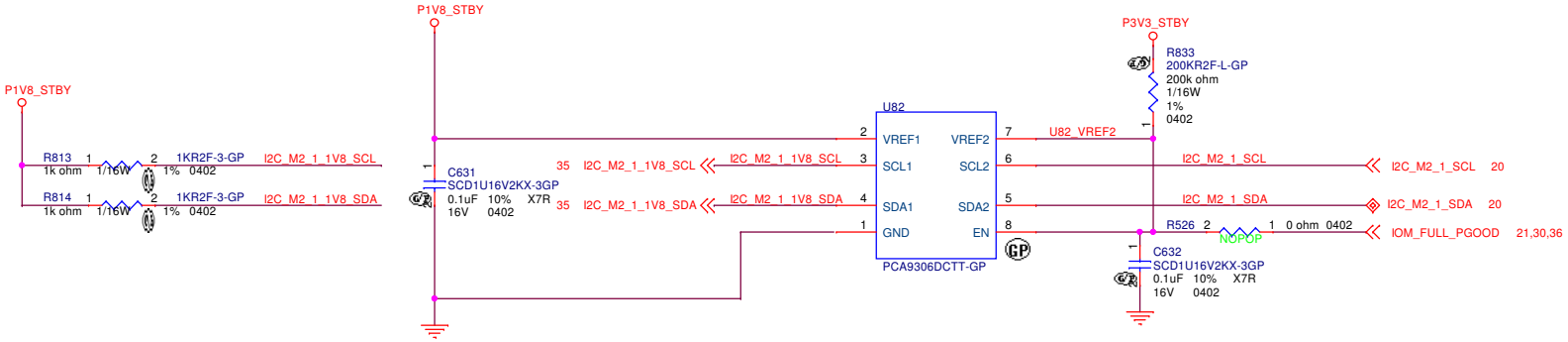

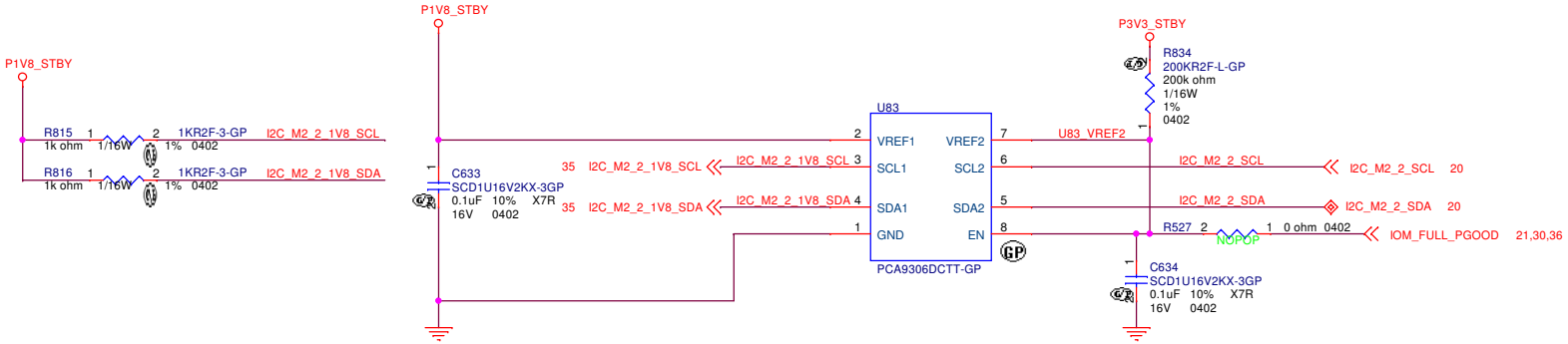

wiwynn

Bryce Canyon_IO Module_M.2
8F, 90, Sec.1, Xintai 5th Rd., Xizhi Dist.,
New Taipei City 22102, Taiwan (R.O.C.)
http://www.wiwynn.com

Title: M.2_I2C LEVEL SHIFT

Size: A3 | Document Number: Bryce Canyon_IO Module_M.2 | Rev: 2

Date: Friday, December 08, 2017 | Sheet 36 of 38

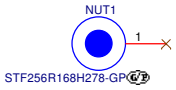

wiwynn
Bryce Canyon_IO Module_M.2
8F, 90, Sec.1, Xintai 5th Rd., Xizhi Dist.,
New Taipei City 22102, Taiwan (R.O.C.)
http://www.wiwynn.com

Title
SCREW HOLE

Size	Document Number	Rev
A3	Bryce Canyon_IO Module_M.2	2

Date: Friday, December 08, 2017 Sheet 37 of 38