SL.No	TITLE	PAGE NO
1	Block Diagrams	Page2-Page10
2	Clock Circuits	Page11-Page12
3	CNX88091 Contol Interface	Page14
4	CNX88091 PORTS	Page15-16
5	CNX88091 Strapping	Page17
6	CNX88091 CORE & AVDD POWER	Page18
7	CNX88091 Decoupling Caps	Page19
8	CNX88091 GND	Page20
9	CNX88091 GND	Page21
10	LEFT BLANK	Page22-Page25
11	P/S 2.5V and 1V PLL LDOs	Page26
12	P/S 1.0V Core switching supply	Page27-Page28
13	P/S 1.0V analog switching supply	Page29-Page30
14	P/S 3.3V switching supply	Page31-Page32
15	P/S 1.8V	Page33
16	POWER MANAGER	Page34
17	QSFP CONNECTORS 2X2	Page35-Page42
18	QSFP I2C & IO EXPANDERS	Page43-Page45
19	QSFP LEDS	Page46-Page49
20	QSFP LEDS CLOCK BUFFER &SHIFTREGISTERS	Page50-Page51
21	MICROSERVER CONNECTOR	Page52
22	Board Management Controller (BMC)	Page53-Page56
23	BMC DDR	Page57
24	BMC Strapping and Temp Sensor	Page58
25	BMC signal isolation buffer	Page59
26	USB HUB	Page60
27	USB I2C Bridge	Page61
28	GE Switch	Page62
29	BMC PHY	Page63
30	FRONT PANEL PHY	Page64
31	CPLD	Page65
32	BOARD ID & EEPROMS	Page66
33	STANDBY POWER	Page67-Page68
34	MAIN POWER CONNECTOR	Page69
35	FRONT PANEL CONNECTORS	Page70
36	RACKMON & FAN CONNECTOR	Page71
37	HOTSWAP CIRCUIT	Page72
38	DPLL CIRCUIT	Page73
39	COM6	Page74-Page79
40	M.2	Page80
41	MSATA	Page81
42	COM PHY	Page82
43	LEVEL SHIFTERS	Page83
44	CHANGE LOG	Page84

INDEX

CAVIUM

Title: WEDGE100C

Size: C | Document Number: 80-00010-03 | Rev: 2.0

Date: Thursday, December 22, 2016 | Sheet 1 of 84

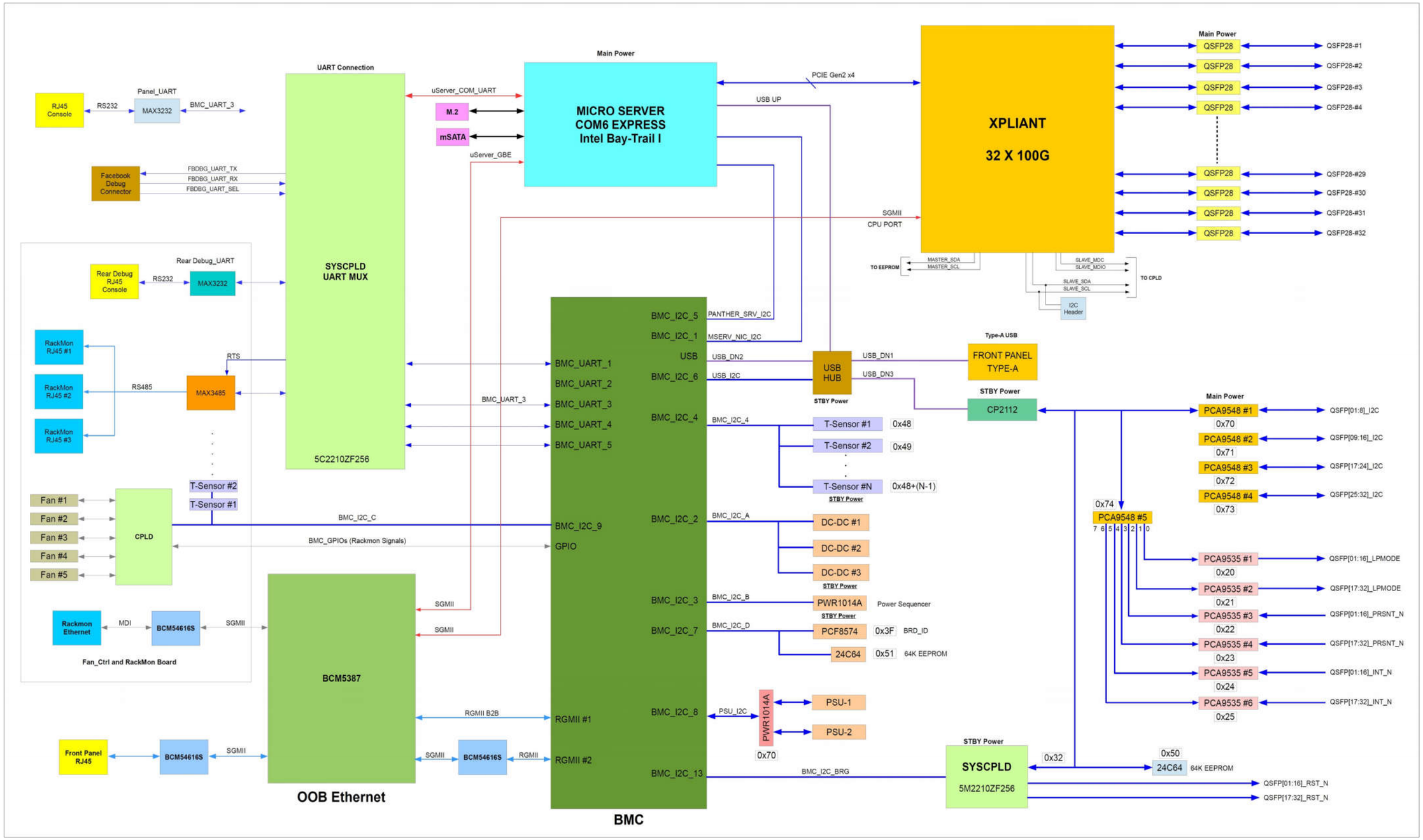

SYSTEM BLOCK DIAGRAM

CAVIUM		
Title: WEDGE100C		
Size: C	Document Number: 80-00010-03	Rev: 2.0
Date: Thursday, December 22, 2016	Sheet 2 of 84	

P12V_IN

TPS54329

P3.3V_ISO

PWR1014A

P3.3V_VSEN
P1.8V_VSEN
P2.5V_VSEN
P1.0V_A_VSEN
P1.0V_ROV_VSEN
P3.3V_STBY_VSEN
P1.8V_STBY_VSEN
P1.5V_STBY_VSEN
P1.2V_STBY_VSEN
P12VIN_VSEN

VMON1
VMON2
VMON3
VMON4
VMON5
VMON6
VMON7
VMON8
VMON9
VMON10

HVOUT1
HVOUT2
OUT5
OUT6
OUT7
OUT8
OUT9
OUT10
OUT11
OUT12
OUT13
OUT14

PWR_CYC_ALL_N
PWR_MAIN_EN
SYSCPLD N/A
PWR_STBY_OK

IN1
IN2
IN3
IN4

BMC_I2C_7_SCL
BMC_I2C_7_SDA
SM_ALERT_N
PD_STBY_RESET_N

OUT3
OUT4

PD_MAIN_RESET_N
PWR_MSRV_FORCE
PWR_MAINTH_FORCE
BMC_I2C_2_SCL
BMC_I2C_2_SDA

P12V_uSERVER_EN

SLG55021
ON
G

PWR_STBY_EN

STANDBY POWER DOMAIN

NMOS 4A
S
G
D
BSC010NE2LS
1mohm RdsON

P12V_uSRVER — 4A

TPS54329 — P5V_STBY — 2A

TPS54329 — P6V_STBY — 2A

TPS53318 — P3.3V_STBY, P3.3V_STBY_OK — 6A

TPS62130 — P2.5V_STBY, P2.5V_STBY_OK — 1.5A

TPS62130 — P1.8V_STBY, P1.8V_STBY_OK — 1.5A

TPS62130 — P1.5V_STBY, P1.5V_STBY_OK — 1.5A

TPS62130 — P1.2V_STBY, P1.2V_STBY_OK — 3A

MAIN POWER DOMAIN

P1.8V_EN — TPS54329 — P1.8V — 3A

P2.5_EN — P3.3V — TPS73601 — P2.5V — 0.4A

P3.3V — P_VDD_ANLG_EN — MCP1824T — P1V PLL — 0.3A

P3.3V_EN — IR3584+2 x IR3556 2-phase — P3.3V — 50A

P_VDD_ANLG_EN — IR3584+2 x IR3556 2-phase — P VDD_ANLG — 50A

P_VDD_CORE_EN — IR3581+2 x IR3556 6-phase — P VDD_CORE — 180A

* POWER MONITOR
* POWER SEQUENCER
* POWER MEASUREMENT

PWR_STBY_OK=P1.2V_STBY_OK

POWER BLOCK DIAGRAM

CAVIUM		
Title: WEDGE100C		
Size: C	Document Number: 80-00010-03	Rev: 2.0
Date: Thursday, December 22, 2016	Sheet 3 of 84	

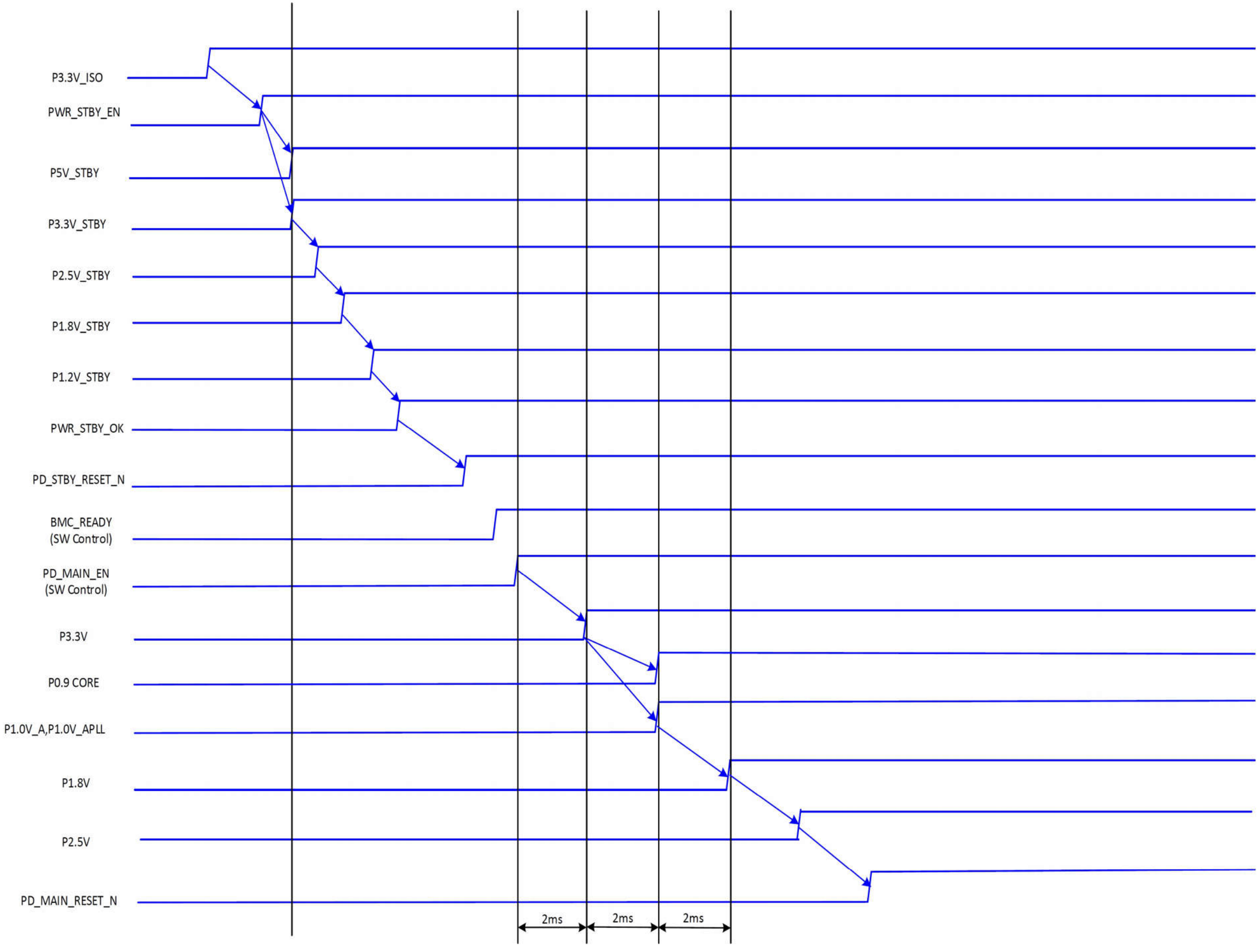

POWER SEQUENCING

CAVIUM

Title: WEDGE100C

Size	Document Number	Rev
C	80-00010-03	2.0

Date: Thursday, December 22, 2016 Sheet 4 of 84

XPLIANT CLOCKS

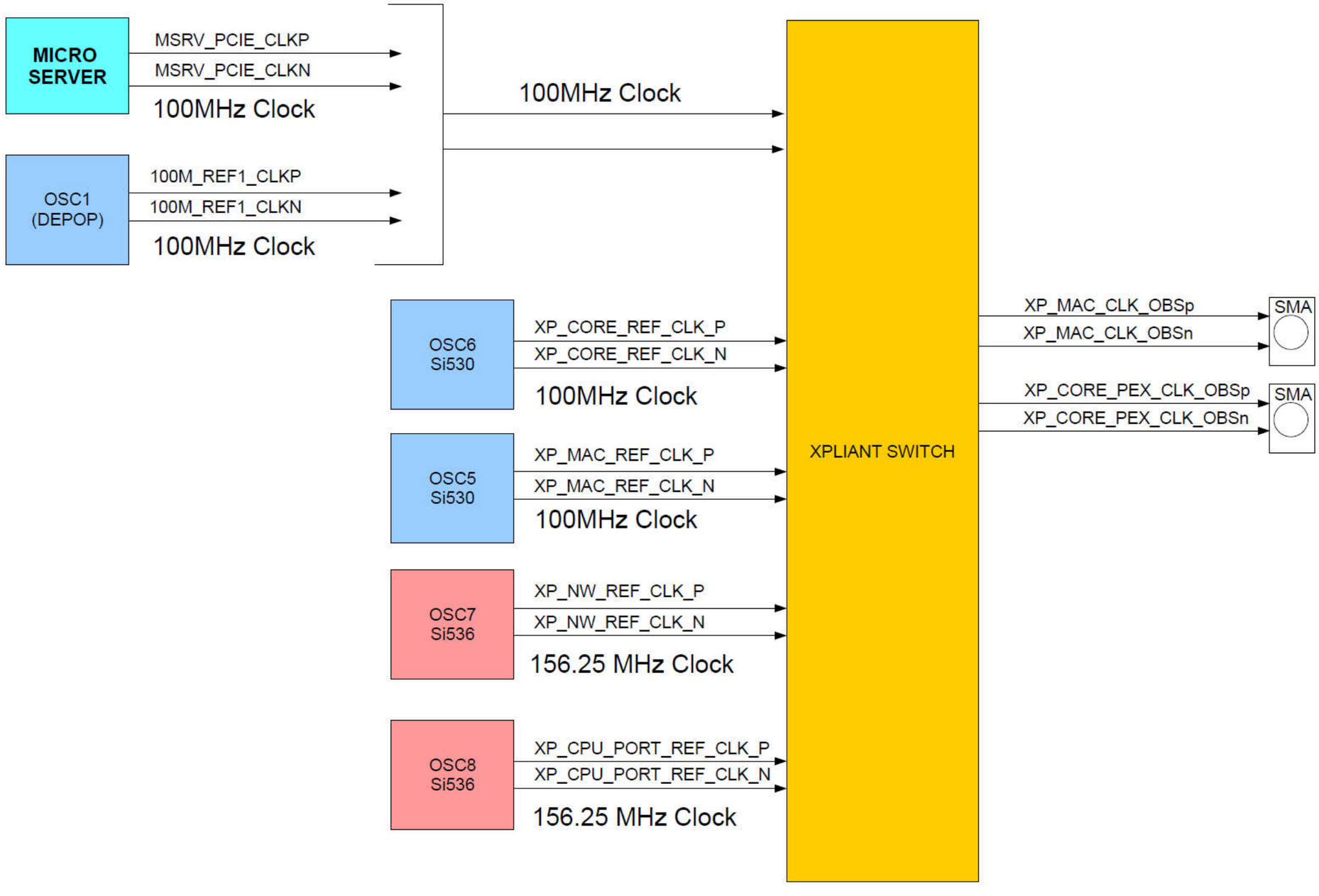

XPLIANT CLOCKS

CAVIUM		
Title: WEDGE100C		
Size: C	Document Number: 80-00010-03	Rev: 2.0
Date: Thursday, December 22, 2016	Sheet 5 of 84	

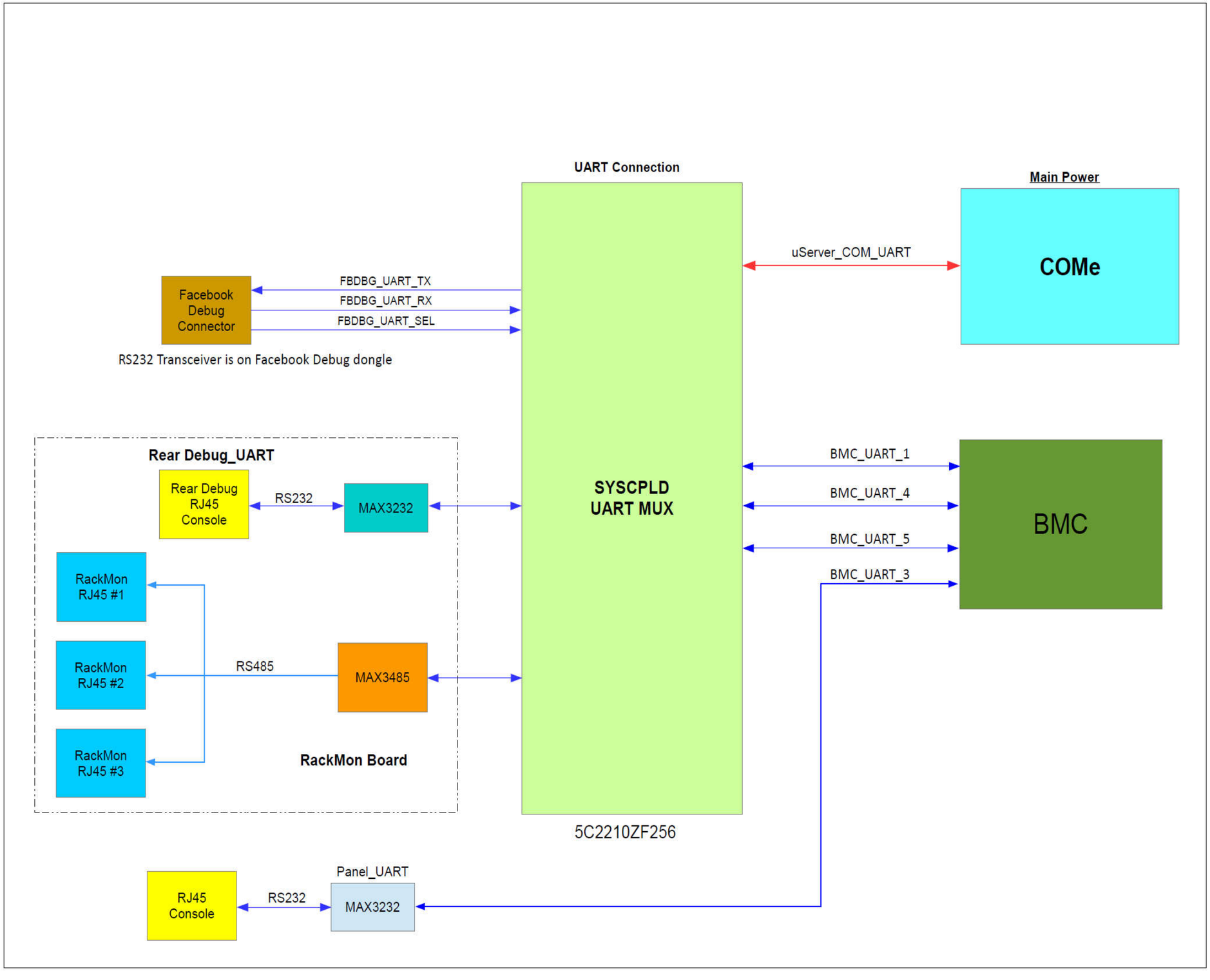

UART BLOCK DIAGRAM

CAVIUM		
Title: WEDGE100C		
Size: C	Document Number: 80-00010-03	Rev: 2.0
Date: Thursday, December 22, 2016	Sheet 6 of 84	

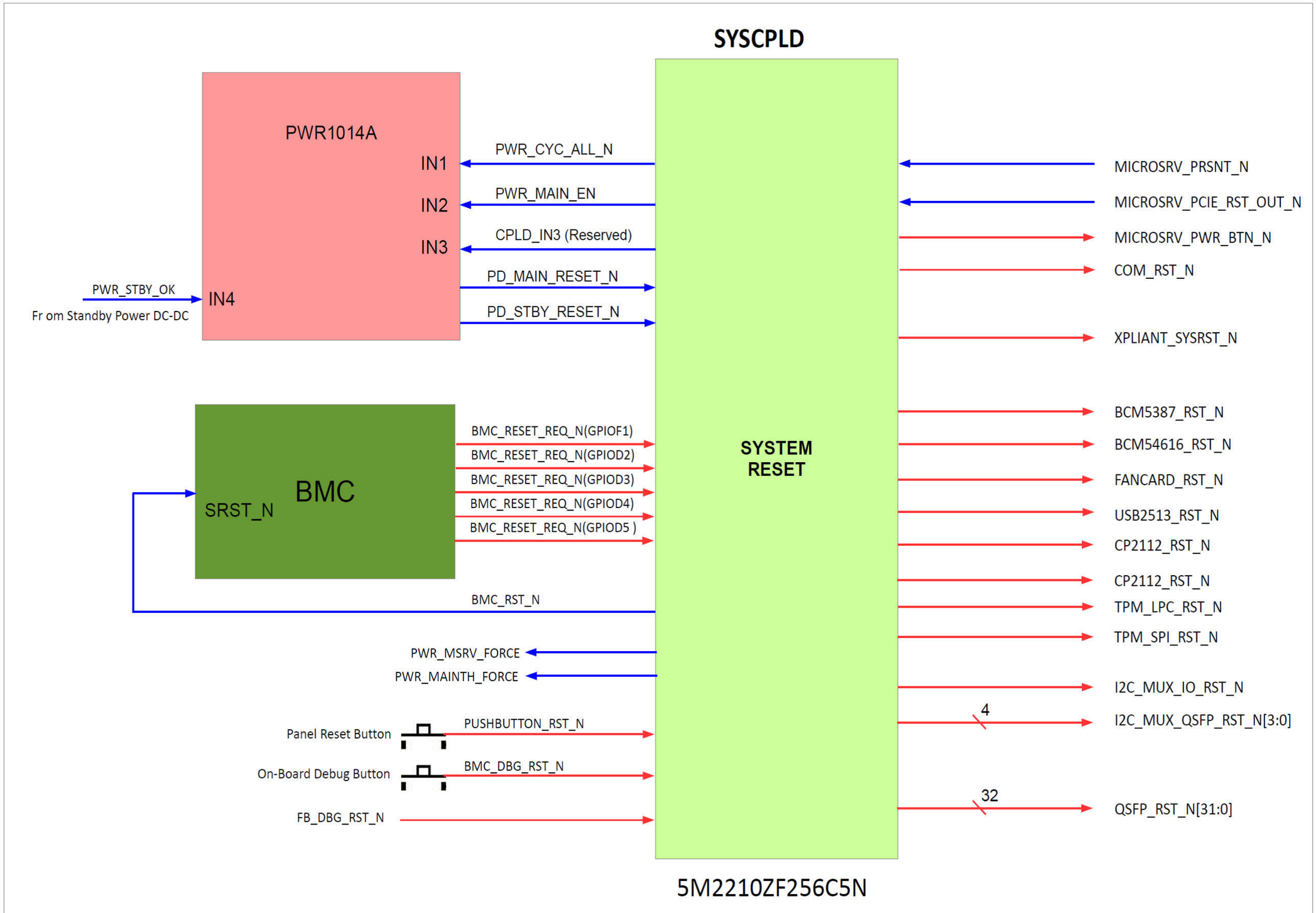

RESET BLOCK DIAGRAM

CAVIUM		
Title: WEDGE100C		
Size: C	Document Number: 80-00010-03	Rev: 2.0
Date: Thursday, December 22, 2016	Sheet 7 of 84	

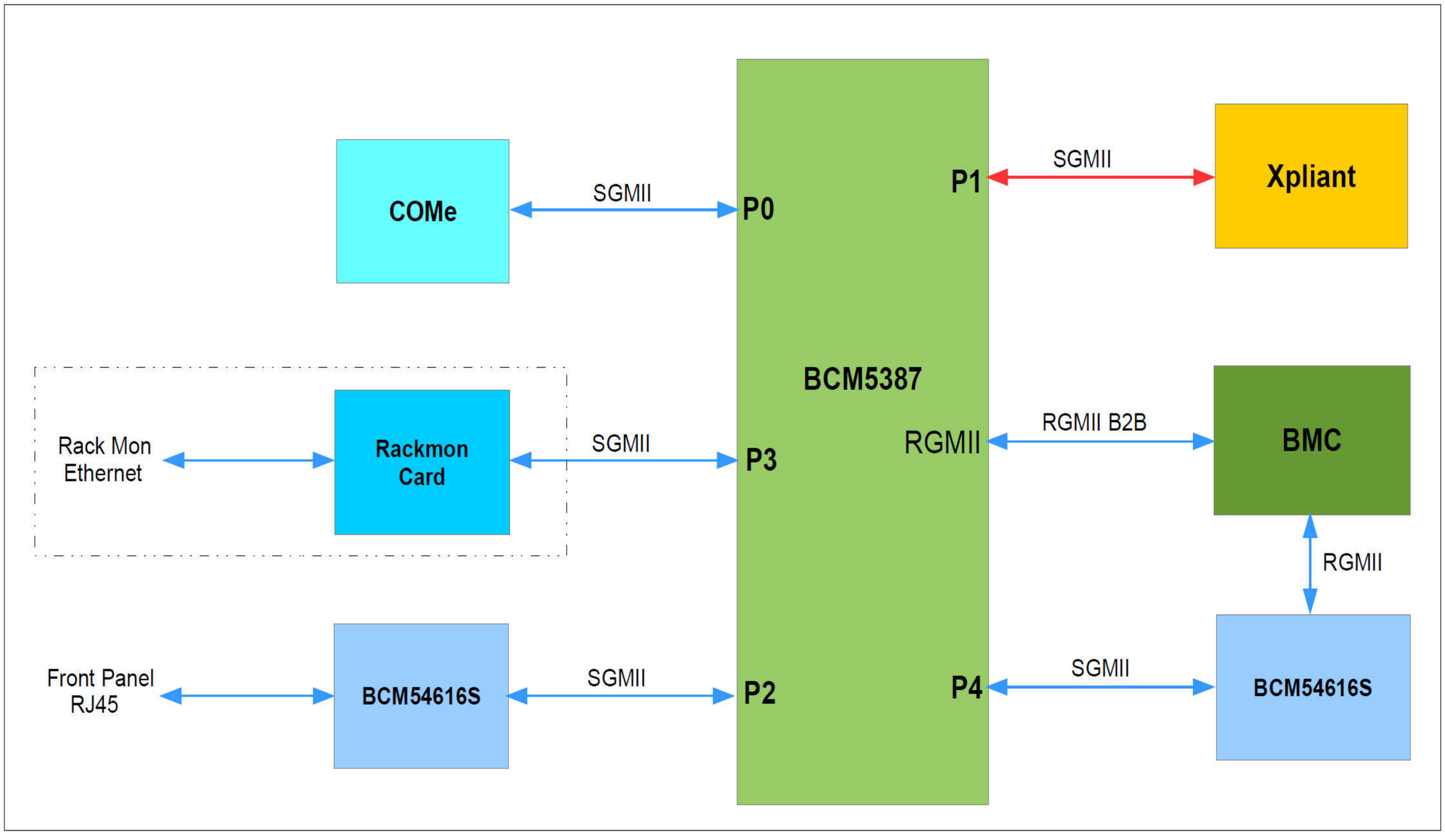

ETHERNET BLOCK DIAGRAM

CAVIUM		
Title: WEDGE100C		
Size: C	Document Number: 80-00010-03	Rev: 2.0
Date: Thursday, December 22, 2016	Sheet 8 of 84	

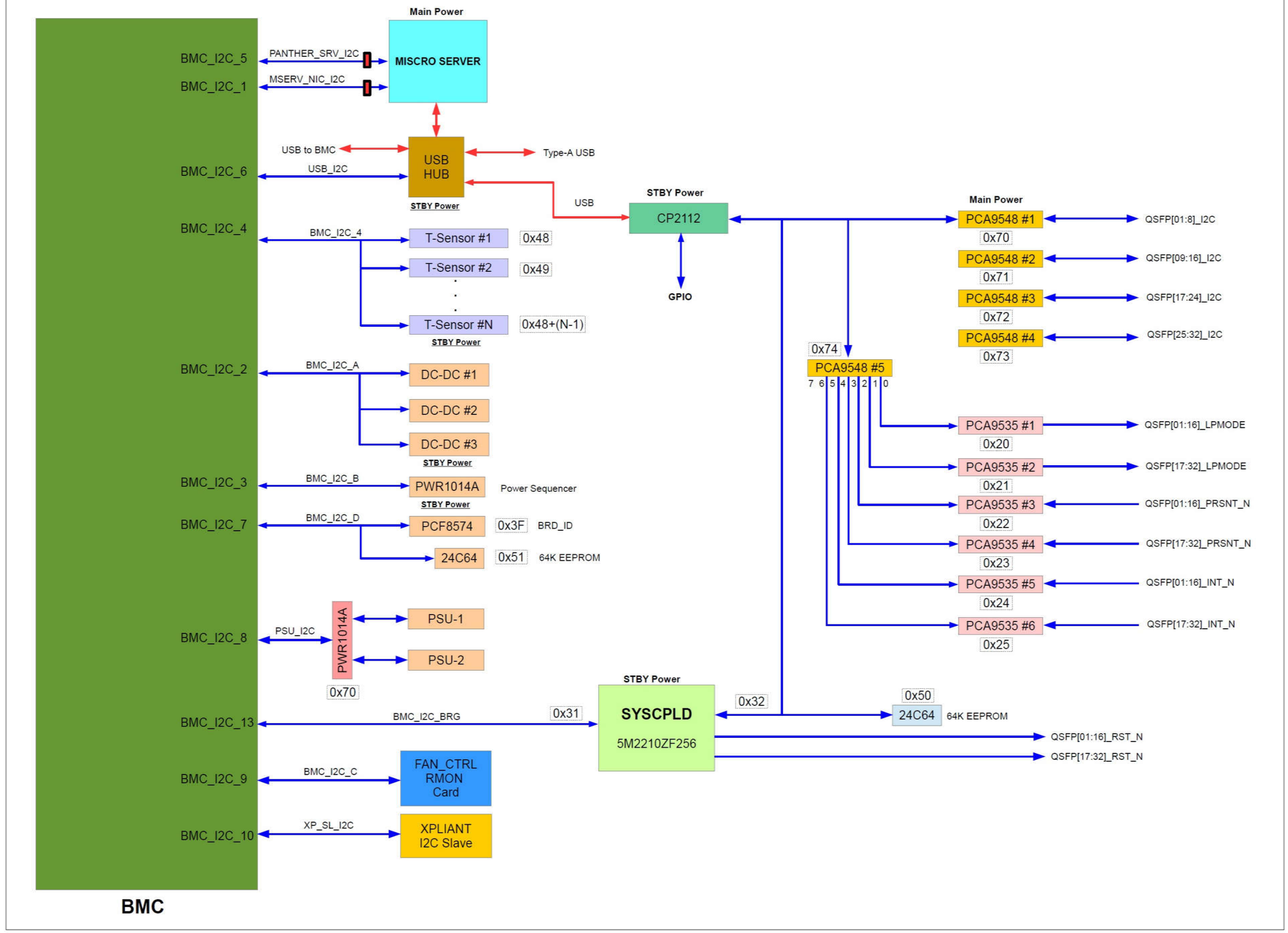

I2C BLOCK DIAGRAM

CAVIUM

Title: WEDGE100C

Size	Document Number	Rev
C	80-00010-03	2.0

Date: Thursday, December 22, 2016 Sheet 9 of 84

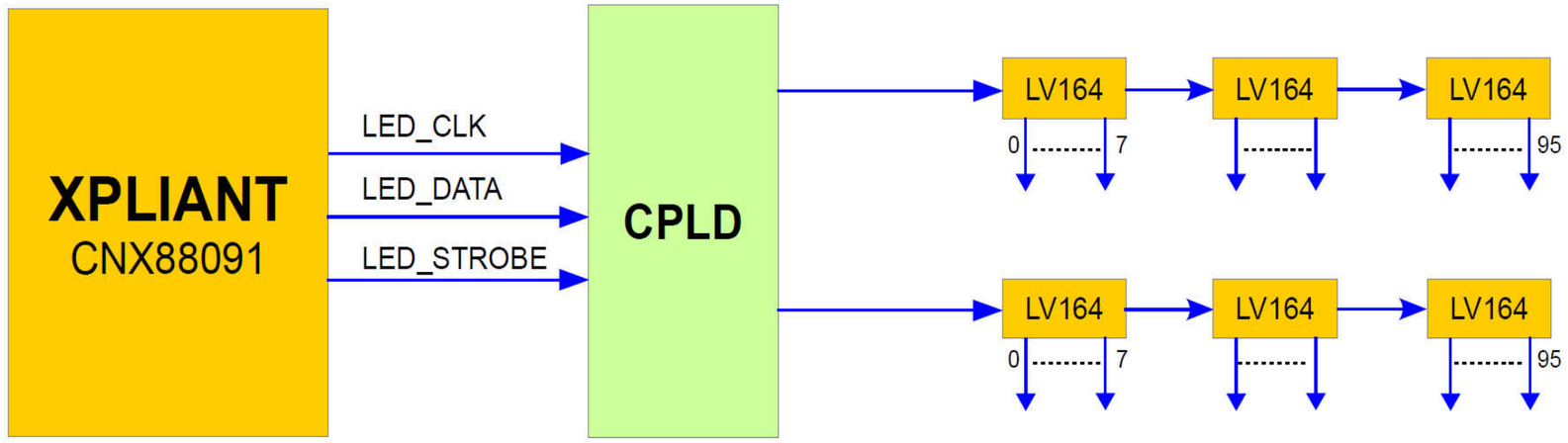

LED STREAM

- Each QSFP port has two Tri-Color LED
- 32x6=196 bits if using Tri-Color LED
- Totally 24 pcs of 74LV164
- Clock input of 74LV164 need buffer

LED BLOCK DIAGRAM

CAVIUM

Title: WEDGE100C

Size	Document Number	Rev
C	80-00010-03	2.0

Date: Thursday, December 22, 2016 Sheet 10 of 84

100MHz PCIE CLOCK

L= BLM18PG331SN1 (FB, 330OHM,PKG:0603,1200mA, DCR:150mOHM,SMD)

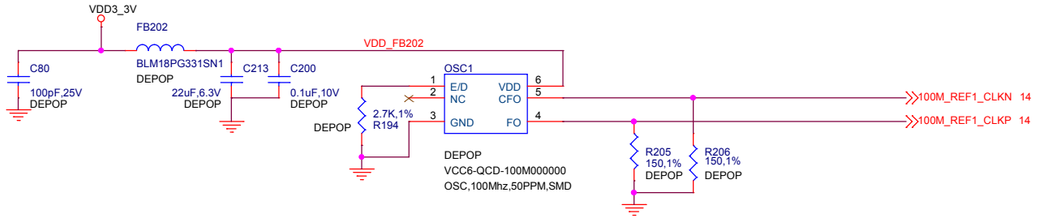

100MHz CORE & MAC CLOCKS

FB= BLM18PG181SN1D (FB,180OHM,PKG:0603,1500mA, DCR:90mOHM,SMD)

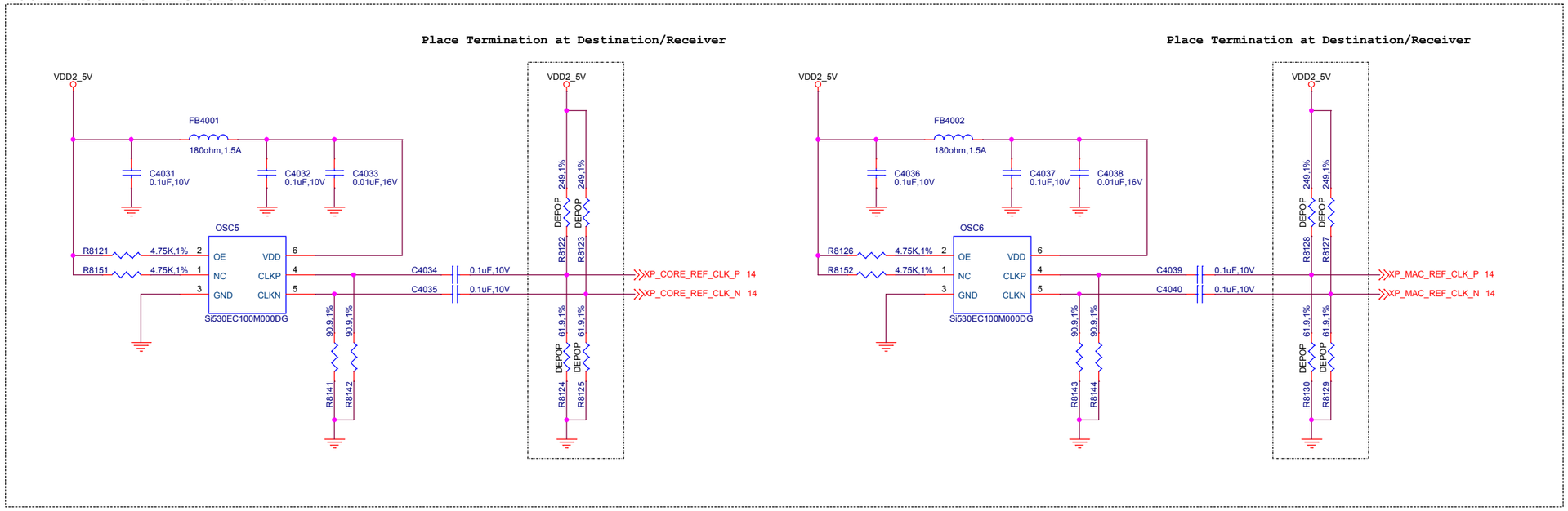

XPLIANT 100MHz Clocks

CAVIUM

Title: WEDGE100C

Size	Document Number	Rev
C	80-00010-03	2.0

Date: Thursday, December 22, 2016 Sheet 11 of 84

156.25MHz CLOCKS

FB= BLM18PG181SN1D
(FB,180OHM,PKG:0603,1500mA, DCR:90mOHM,SMD)

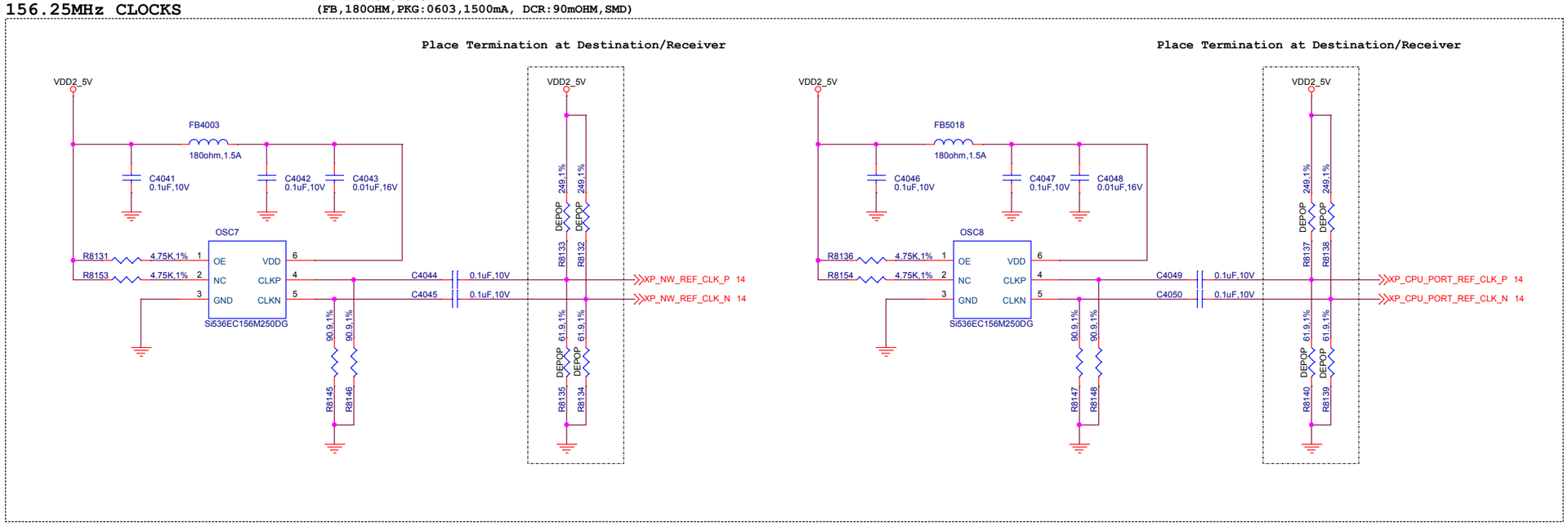

XPLIANT 156.25MHz Clocks

CAVIUM		
Title: WEDGE100C		
Size: C	Document Number: 80-00010-03	Rev: 2.0
Date: Thursday, December 22, 2016	Sheet 12 of 84	

PAGE INTENTIONALLY LEFT BLANK

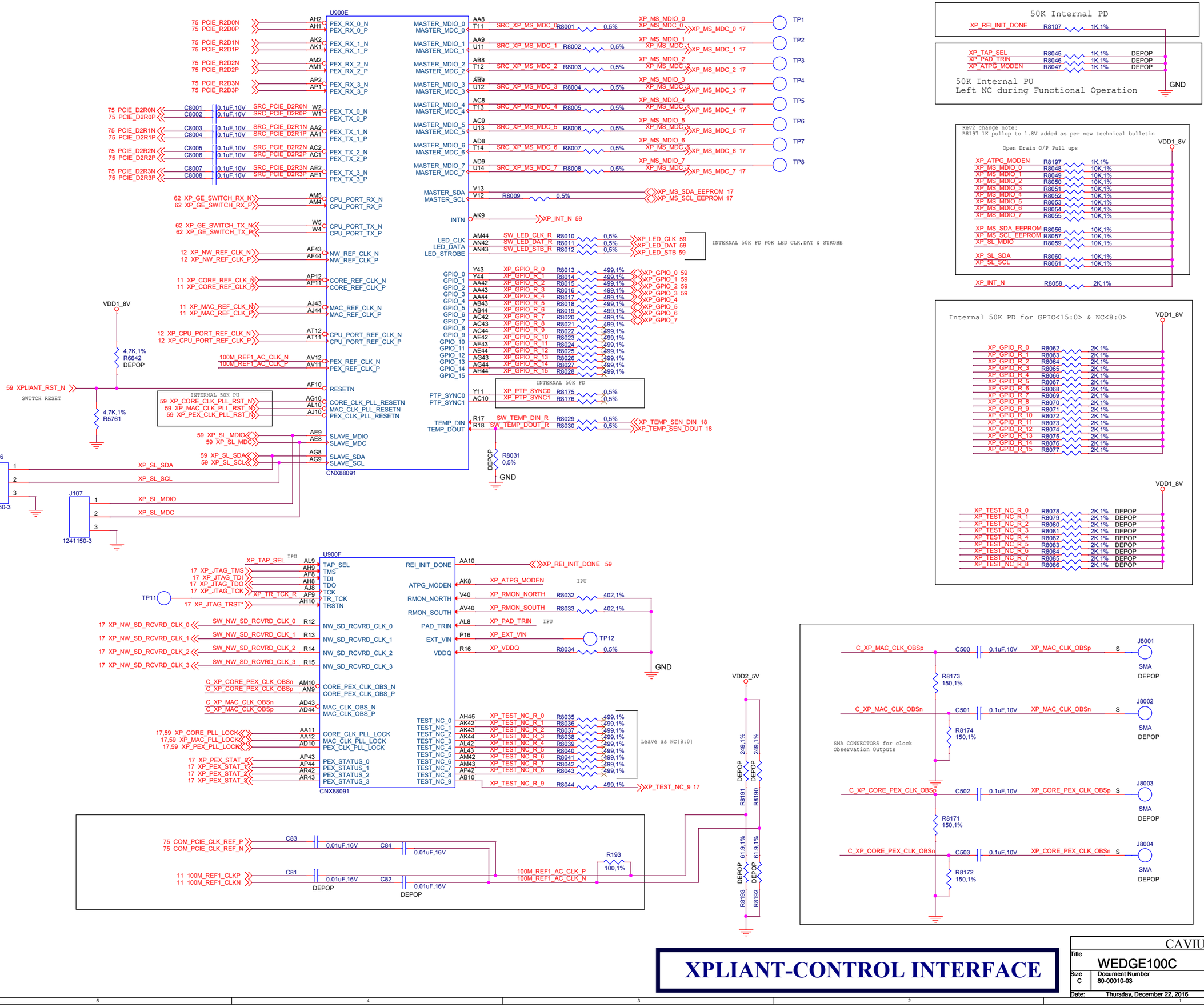
U900E
CNX88091
U900F
CNX88091
XPLIANT-CONTROL INTERFACE
CAVIUM
WEDGE100C
Document Number 80-00010-03
Rev 2.0
Thursday, December 22, 2016
Sheet 14 of 84
50K Internal PD
50K Internal PU
Left NC during Functional Operation
Internal 50K PD for GPIO<15:0> & NC<8:0>
SMA CONNECTORS for clock Observation Outputs
Leave as NC[8:0]
INTERNAL 50K PD FOR LED CLK,DAT & STROBE
INTERNAL 50K PU
INTERNAL 50K PD
SWITCH RESET
Rev2 change note:
R8197 1K pullup to 1.8V added as per new technical bulletin
Open Drain O/P Pull ups

REV1 CHANGE NOTE : Deleted SMAs J4217,J4218,J4219,J4220

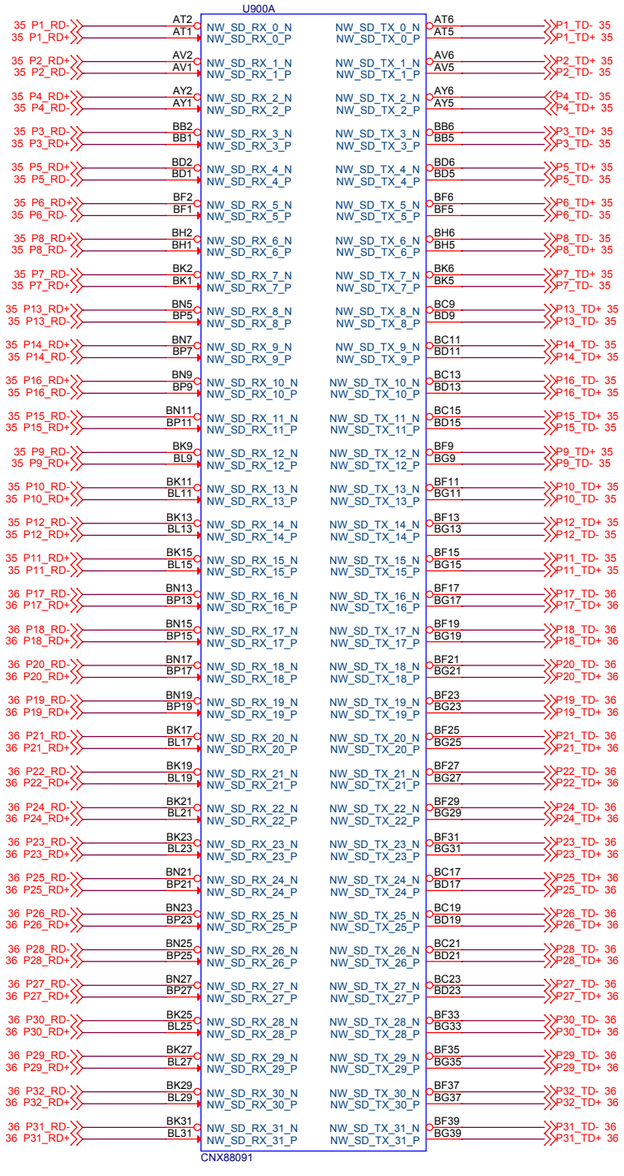

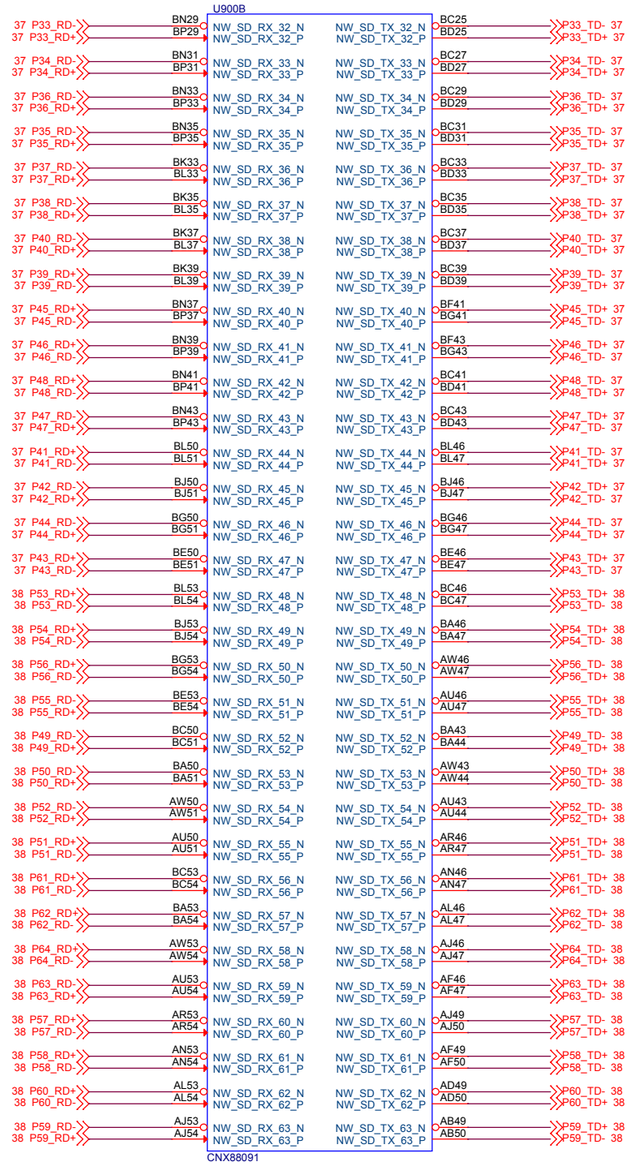

XPLIANT-PORTS

CAVIUM

Title: WEDGE100C

Size	Document Number	Rev
C	80-00010-03	2.0

Date: Thursday, December 22, 2016 Sheet 15 of 84

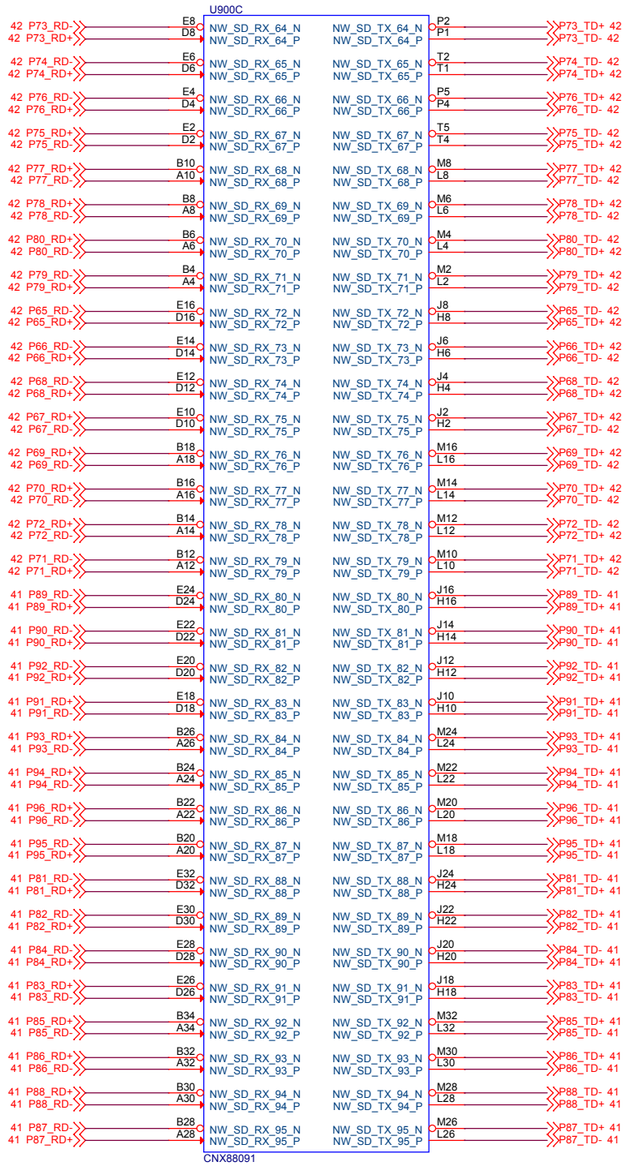

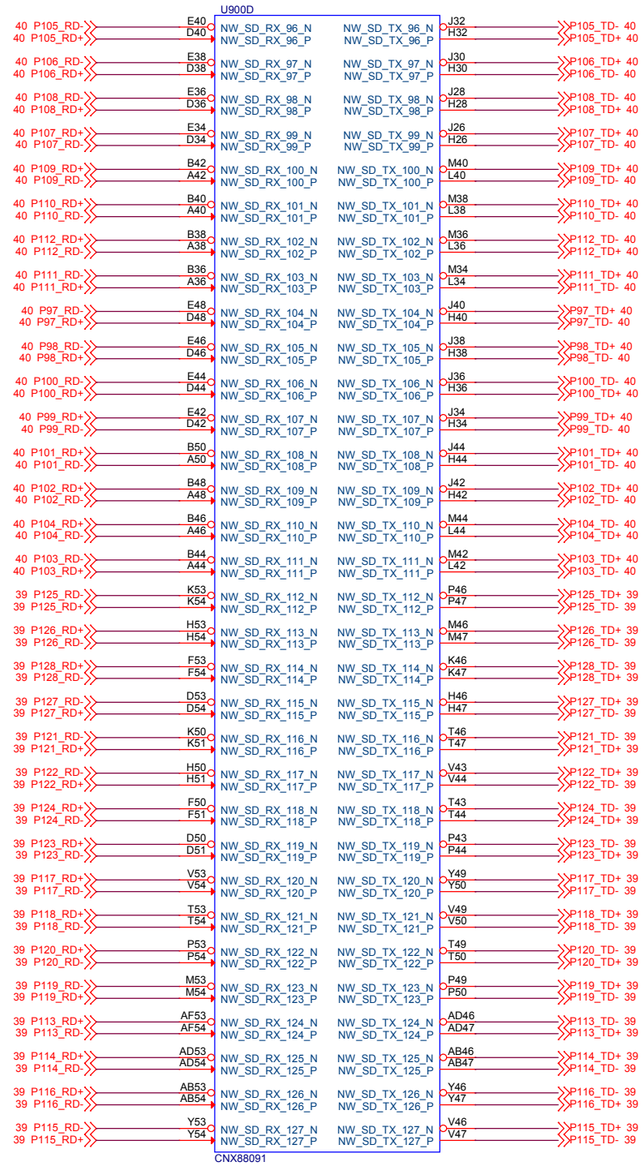

XPLIANT-PORTS

CAVIUM

Title: WEDGE100C

Size	Document Number	Rev
C	80-00010-03	2.0

Date: Thursday, December 22, 2016 Sheet 16 of 84

STRAPPING OPTIONS

(ALL THESE PINS HAVE 50K INTERNAL PULL DOWN)

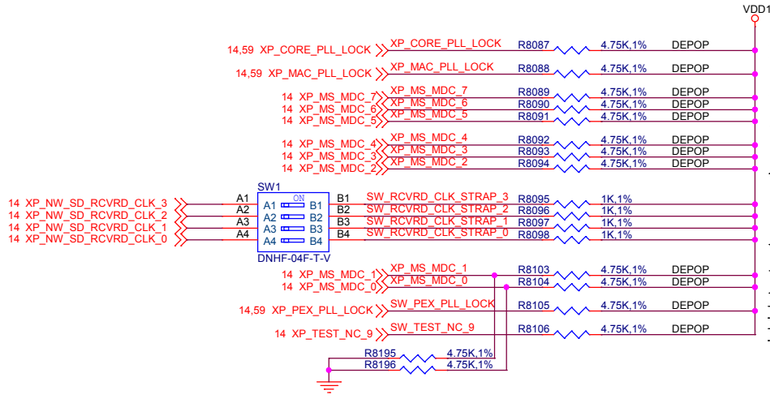

MASTER_I2C_BOOT_EN=[0] (Master I2C interface is diabled 1=Master I2C interface is enabled)

MASTER_I2C_HS_EN=[0] (Master I2C interface mode, 0-Fast mode,400KHz,1-High Speed Mode,3.4MHz)

MASTER_I2C_HS_CODE_LOW[2:0]=[000] (3 bits appended with 0000_1xxx to create high speed master code used by I2C master controller while in high speed operation)

SLAVE_I2C_ADDR_LOW[2:0]=[000] Lower 3 bits of the 7 bit address for the device's I2C slave, 0000_xxx)

CORE_CLK_PLL_CFG[3:0]=[1000] (Configuration of core clock speed, 600 MHz Default)
[For A0 Silicon:1010 (550MHz) and for B0 Silicon: 1000 (600MHz)]
Switch should be configured to reflect default configuration ON=1 and OFF=0

CORE_CLK_SEL[1:0]=[00] (Core Clock Source,Default=Output of CORE_CLK_PLL)

PEX_CLK_PLL_LOCK_MASK=[0] (Enables masking off the PEX PLL Lock Indication and continue with Reset sequence, 0=Not Masked, 1=Masked)

CORE_CLK_PLL_LOCK_MASK=[0] (Enables masking off the CORE PLL Lock Indication and continue with Reset sequence, 0=Not Masked, 1=Masked)

CORE CLOCK FREQUENCY SWITCH CONFIG

0x0= 700MHz
0x1=733.33MHz
0x2=750MHz
0x3=766.67MHz
0x4=800MHz
0x5=666.67MHz
0x6=650MHz
0x7=633.33MHz
0x8=600MHz
0x9=566.67MHz
0xA=550MHz
0xB=533.33MHz
0xC=500MHz
0xD=466.67MHz
0xE=433.33MHz
0xF=400MHz

REV1 CHANGE NOTE : SW1 part number changed to DNHF-04F-T-V from Dawning.

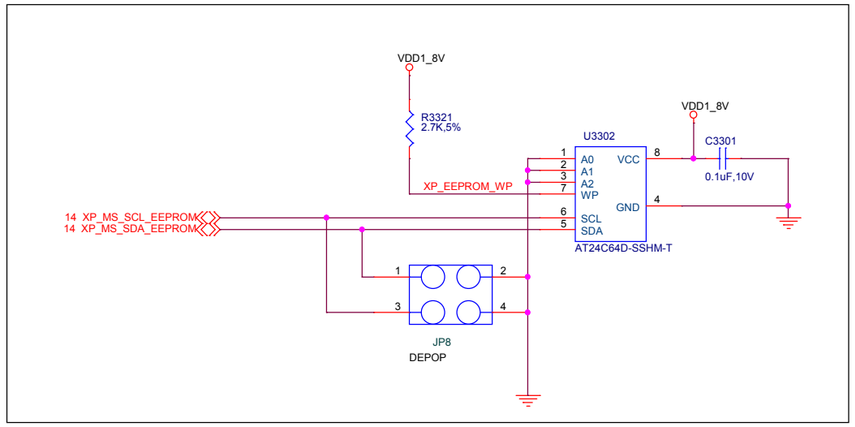

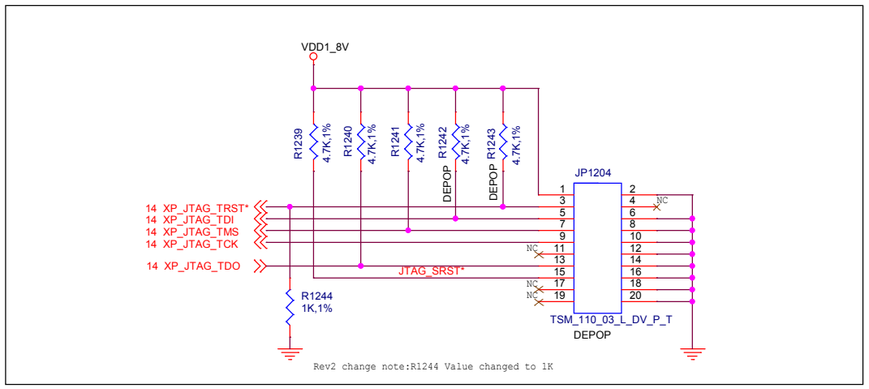

PEX STATUS LEDS

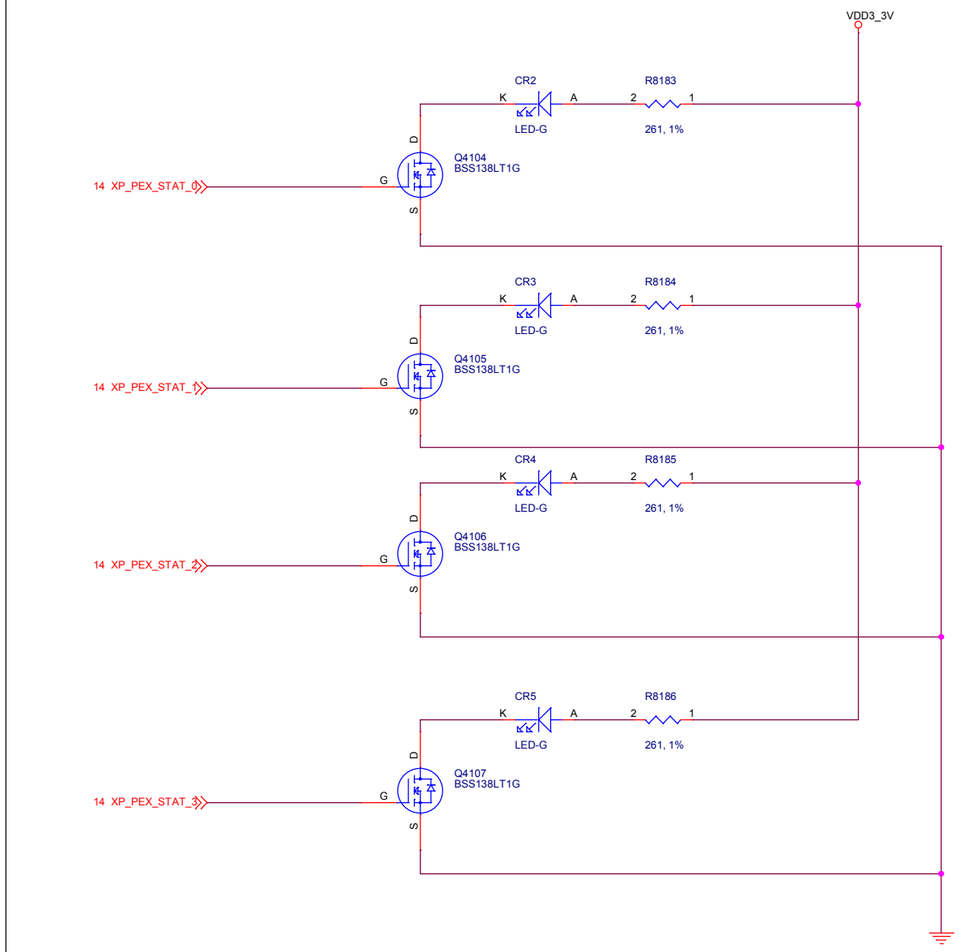

XPLIANT-STRAPPING & JTAG

CAVIUM

Title: WEDGE100C

Size: C | Document Number: 80-00010-03 | Rev: 2.0

Date: Thursday, December 22, 2016 | Sheet 17 of 84

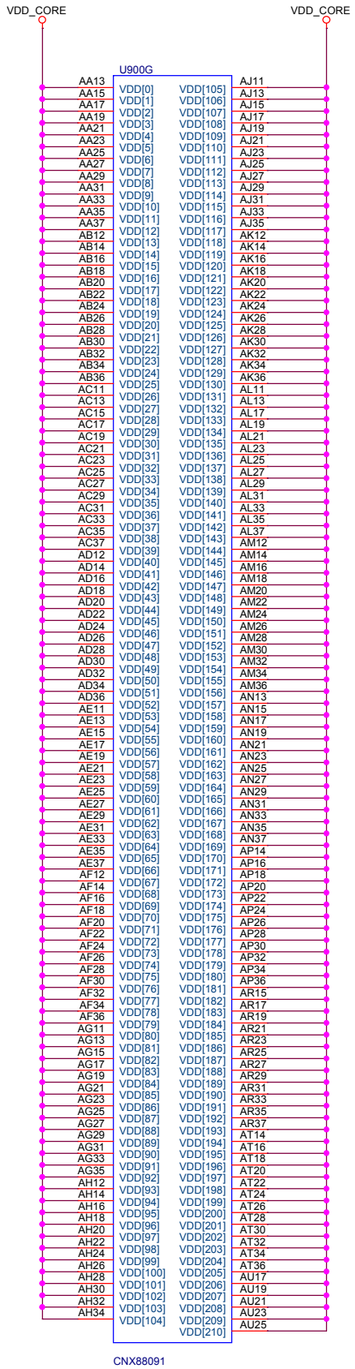

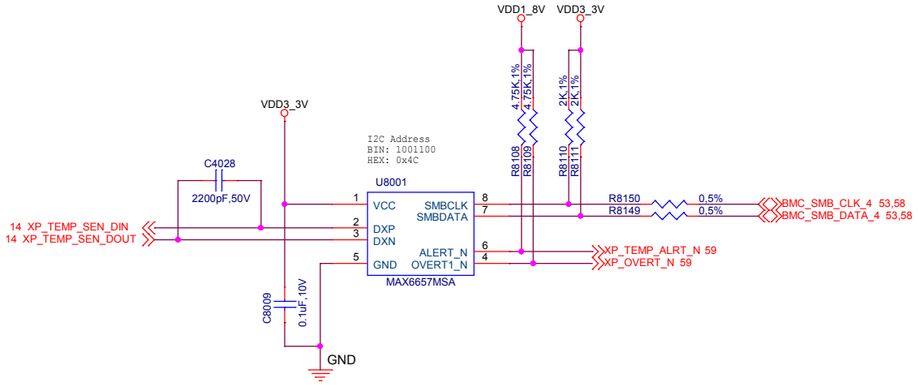

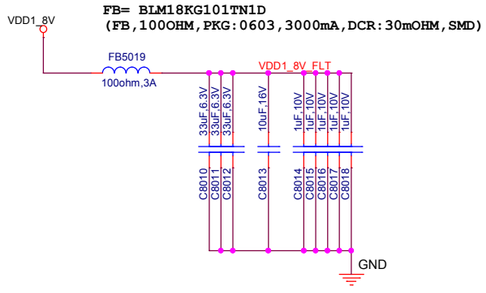

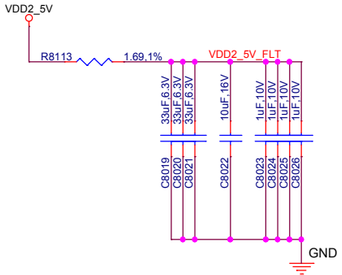

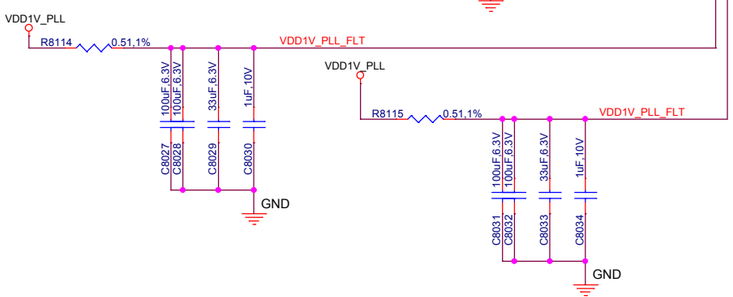

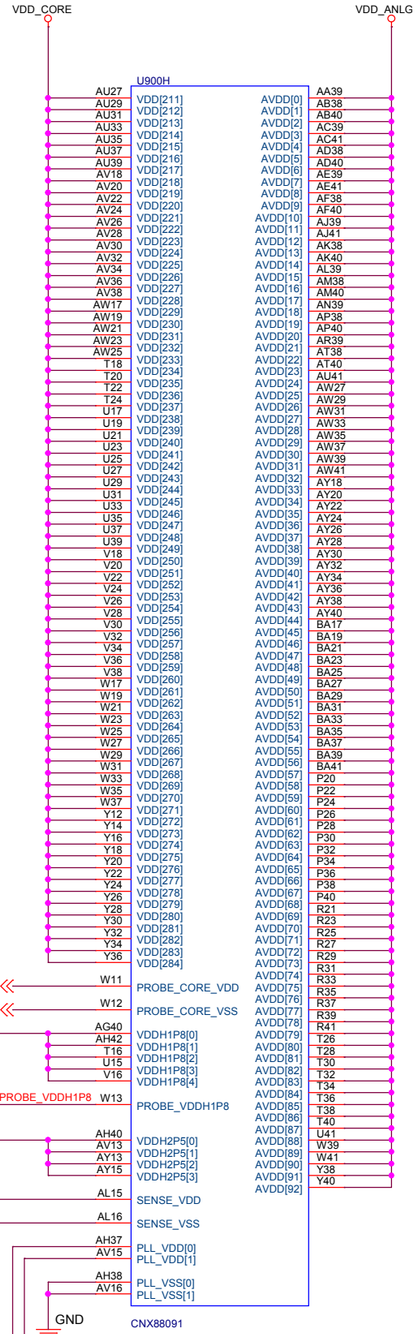

XPLIANT-CORE & AVDD POWER

CAVIUM		
Title: WEDGE100C		
Size: C	Document Number: 80-00010-03	Rev: 2.0
Date: Thursday, December 22, 2016	Sheet 18 of 84	

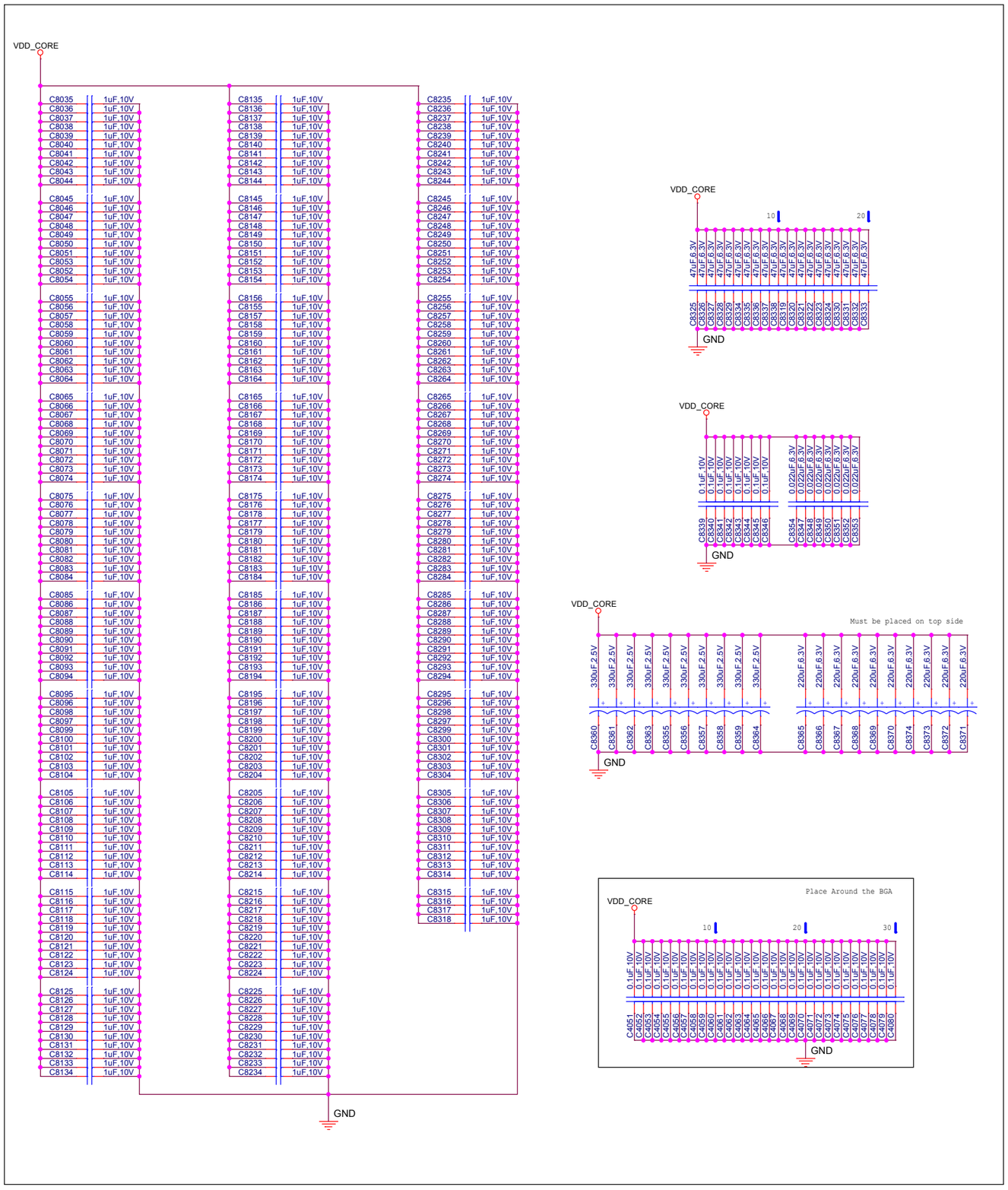

NOTE: KC1 and KC2 NEED TO BE PLACED AT AN OPTIMAL LOCATION NEAR LOAD AND ROUTE DIFFERENTIALLY

REV1 CHANGE NOTE : Changed
C4015,C4016,C4017,C4018,C4019,C8355,C8356,C8357,C8358,C8359,C8360,C8361,C8362,C8363,C8364 with 330UF,2.5V PART (EEF-HX0E331R4 part from Panasonic)

XPLIANT-DECOUPLING CAPS

CAVIUM

Title: WEDGE100C

Size	Document Number	Rev
C	80-00010-03	2.0

Date: Thursday, December 22, 2016 Sheet 19 of 84

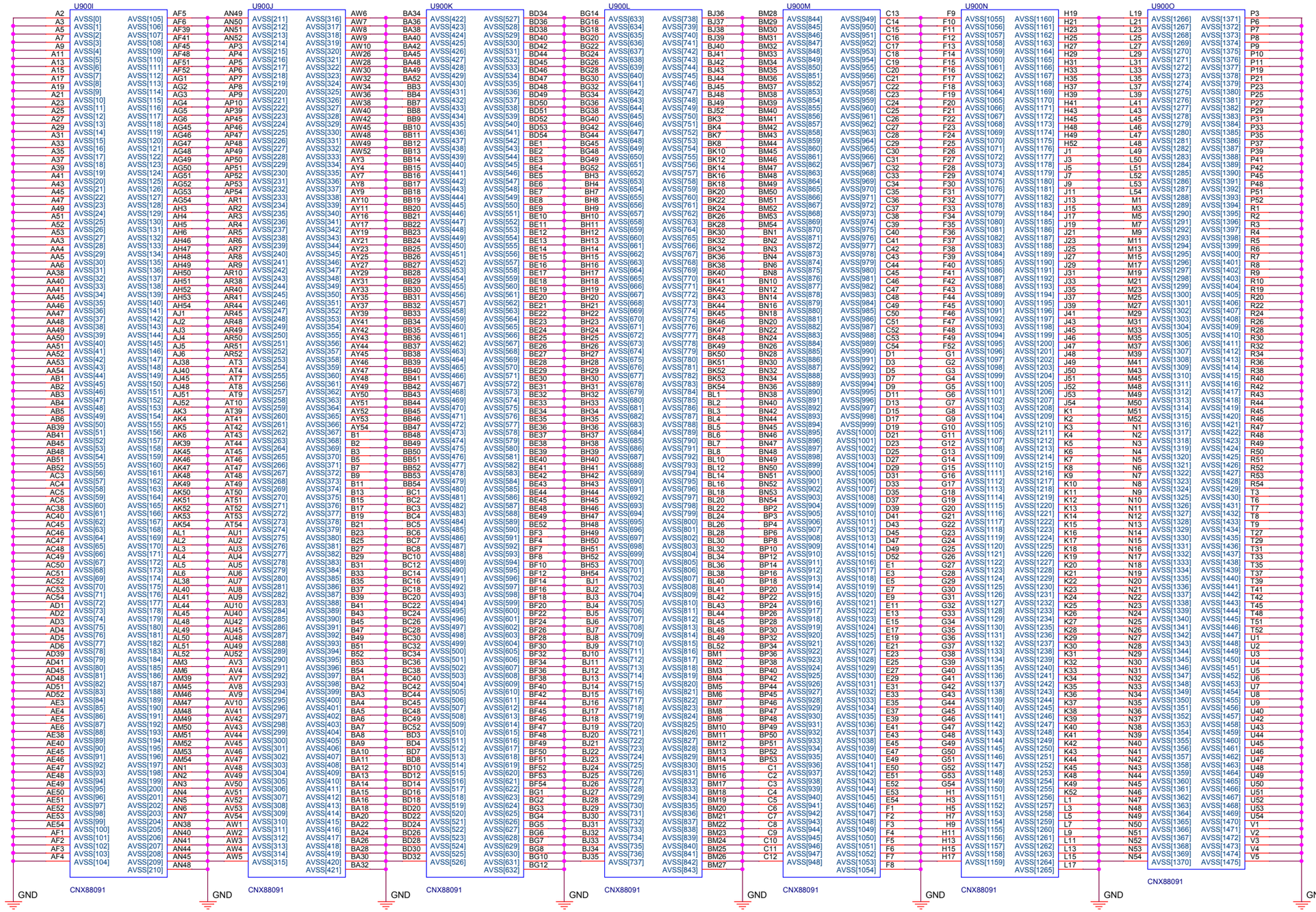

XPLIANT-GND

CAVIUM

Title: WEDGE100C

Size	Document Number	Rev
C	80-00010-03	2.0

Date: Thursday, December 22, 2016 Sheet 20 of 84

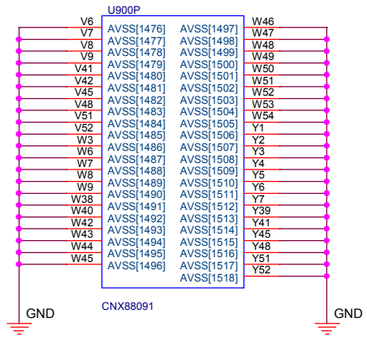

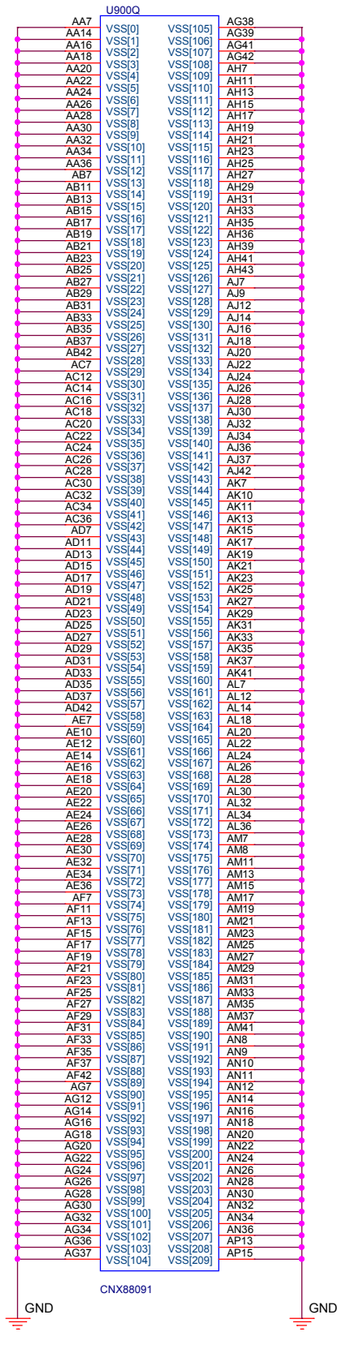

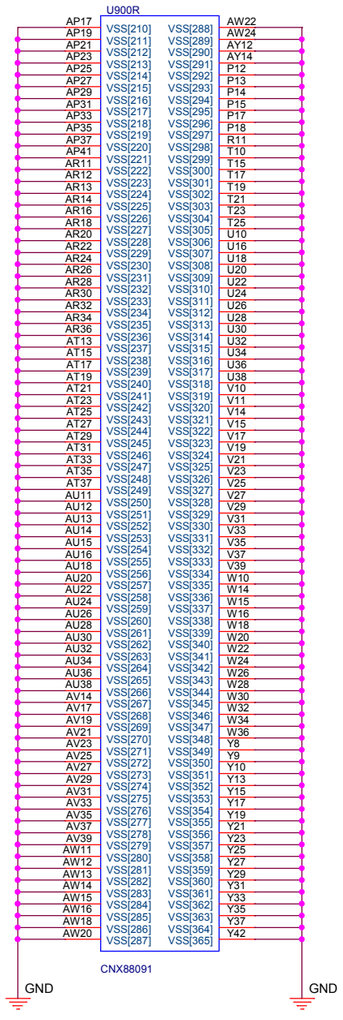

XPLIANT-GND

CAVIUM		
Title: WEDGE100C		
Size: C	Document Number: 80-00010-03	Rev: 2.0
Date: Thursday, December 22, 2016	Sheet 21 of 84	

PAGE INTENTIONALLY LEFT BLANK

PAGE INTENTIONALLY LEFT BLANK

PAGE INTENTIONALLY LEFT BLANK

PAGE INTENTIONALLY LEFT BLANK

PS 2.5V ,0.4A

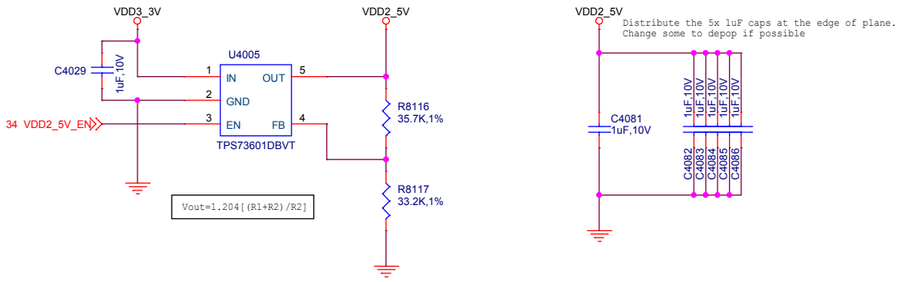

PS 1V_PLL ,0.3A

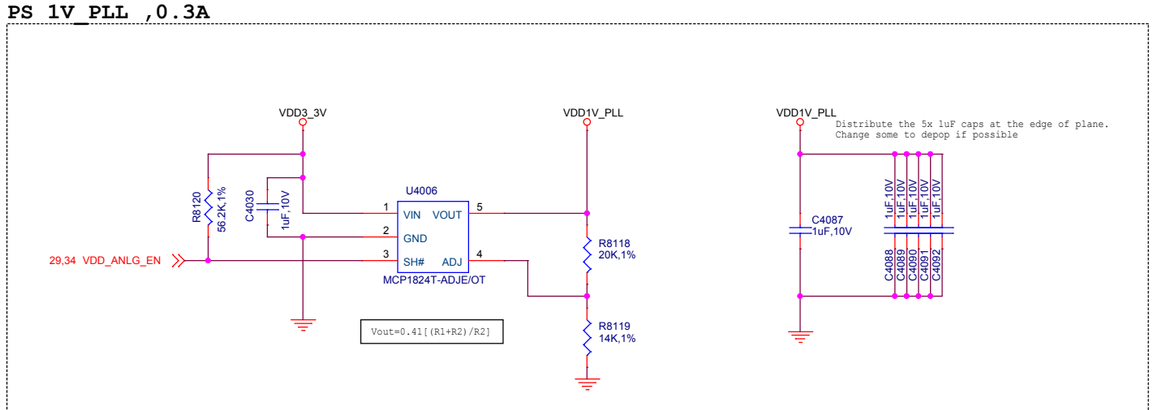

PS-2.5V & 1V PLL

CAVIUM		
Title: WEDGE100C		
Size: C	Document Number: 80-00010-03	Rev: 2.0
Date: Thursday, December 22, 2016	Sheet 26 of 84	

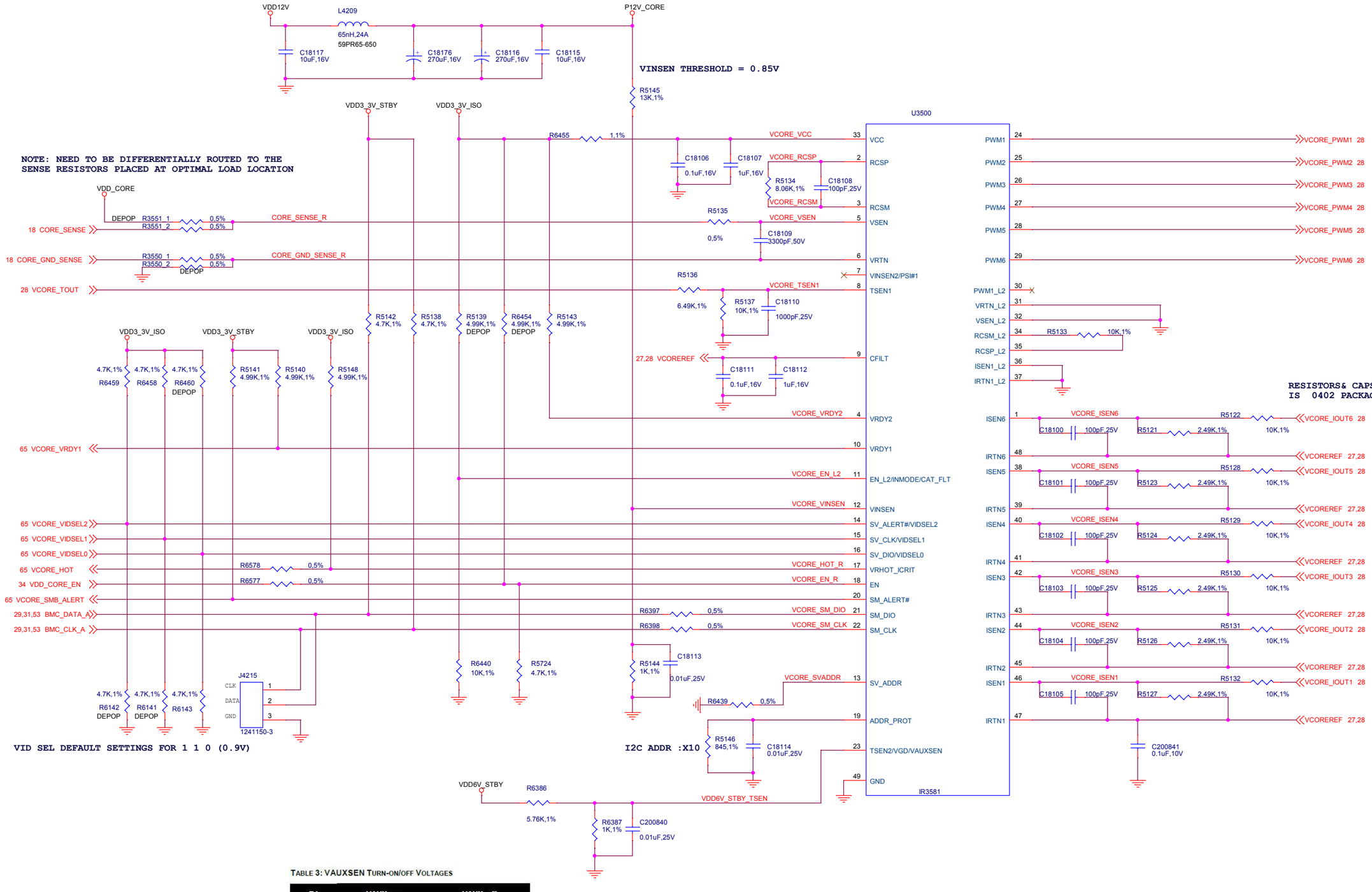

TABLE 3: VAUXSEN TURN-ON/OFF VOLTAGES

R1	VAUX_on	VAUX_off
KΩ	Volt	Volt
5.77	4.50	3.97

PS0.9V-CORE

CAVIUM		
Title: WEDGE100C		
Size: C	Document Number: 80-00010-03	Rev: 2.0
Date: Thursday, December 22, 2016	Sheet 27 of 84	

PLACE UNDER DRIVER CHIP

P12V_CORE

C19136 10uF,25V, C19137 10uF,25V, C19124 0.22uF,25V, C19122 10uF,16V, C19121 10uF,16V

U3600 IR3555

VIN6 VIN5 VIN4 VIN3 VIN2 VIN1 PGND3 PGND2

NC, TOUT/FLT, IOUT, ZCD_EN#, LGND, PWM, REFIN

SW10 SW9 SW8 SW7 SW6 SW5 SW4 SW3 SW2 SW1

VCC VDRV PGND1 PGND4 GATEL1 GATEL2 BOOST

27,28 VCORE_TOUT

27 VCORE_IOUT1

27 VCORE_PWM1

27,28 VCOREREF

0.1uF,16V C19119

VDD6V_STBY

C19032 1uF,16V

VCORE_PH1

L4102 150nH,70A 59P9872N IND,150nH,70A,0.29mOHM,SMD

VDD_CORE

C19034 22uF,6.3V

VCORE_BST1

C19029 0.22uF,25V

R6535 0,5%

PLACE UNDER DRIVER CHIP

P12V_CORE

C19138 10uF,25V, C19139 10uF,25V, C19051 0.22uF,25V, C19050 10uF,16V, C19049 10uF,16V

U3601 IR3555

27,28 VCORE_TOUT

27 VCORE_IOUT2

27 VCORE_PWM2

27,28 VCOREREF

C19123 0.1uF,16V

VDD6V_STBY

C19046 1uF,16V

VCORE_PH2

L2 150nH,70A 59P9872N IND,150nH,70A,0.29mOHM,SMD

VDD_CORE

C19048 22uF,6.3V

VCORE_BST2

C19038 0.22uF,25V

R6536 0,5%

VDD_CORE

R6447 49.9,1%

C19020 470uF,6.3V, C19118 470uF,6.3V, C19117 470uF,6.3V, C19112 470uF,6.3V, C19113 470uF,6.3V, C19114 470uF,6.3V, C19115 470uF,6.3V, C19116 470uF,6.3V

VDD_CORE

C19200 470uF,2V, C19201 470uF,2V

PLACE THESE 3PIN CAPS NEAR XPLIANT

10 x 22uF/0805 MLCC near VR, on top layer

VDD_CORE

C19021, C19022, C19023, C19024, C19120, C19133, C19134, C19135, C19003, C19004 — 22uF,6.3V

10 x 22uF/0805 MLCC near VR, on top layer

VDD_CORE

C19035, C19036, C19037, C19039, C19040, C19041, C19042, C19044, C19045, C19005 — 22uF,6.3V DEPOP

PLACE UNDER DRIVER CHIP

P12V_CORE

C19143 10uF,25V, C19142 10uF,25V, C19078 0.22uF,25V, C19077 10uF,16V, C19076 10uF,16V

U3602 IR3555

VIN6 VIN5 VIN4 VIN3 VIN2 VIN1 PGND3 PGND2

NC, TOUT/FLT, IOUT, ZCD_EN#, LGND, PWM, REFIN

SW10 SW9 SW8 SW7 SW6 SW5 SW4 SW3 SW2 SW1

VCC VDRV PGND1 PGND4 GATEL1 GATEL2 BOOST

27,28 VCORE_TOUT

27 VCORE_IOUT3

27 VCORE_PWM3

27,28 VCOREREF

0.1uF,16V C19030

VDD6V_STBY

C19065 1uF,16V

VCORE_PH3

L3 150nH,70A 59P9872N IND,150nH,70A,0.29mOHM,SMD

VDD_CORE

C19067 22uF,6.3V

VCORE_BST3

C19063 0.22uF,25V

R6538 0,5%

PLACE UNDER DRIVER CHIP

P12V_CORE

C19141 10uF,25V, C19140 10uF,25V, C19075 0.22uF,25V, C19074 10uF,16V, C19073 10uF,16V

U3603 IR3555

27,28 VCORE_TOUT

27 VCORE_IOUT4

27 VCORE_PWM4

27,28 VCOREREF

C19125 0.1uF,16V

VDD6V_STBY

C19070 1uF,16V

VCORE_PH4

L4 150nH,70A 59P9872N IND,150nH,70A,0.29mOHM,SMD

VDD_CORE

C19072 22uF,6.3V

VCORE_BST4

C19068 0.22uF,25V

R6537 0,5%

20 x 22uF/0805 MLCC near ASIC, on top layer

VDD_CORE

C19056, C19057, C19058, C19059, C19060, C19061, C19018, C19019, C19062, C19052 — 22uF,6.3V

VDD_CORE

C19007, C19008, C19009, C19010, C19011, C19012, C19053, C19054, C19055, C19006 — 22uF,6.3V

PLACE UNDER DRIVER CHIP

P12V_CORE

C19145 10uF,25V, C19144 10uF,25V, C19111 0.22uF,25V, C19110 10uF,16V, C19109 10uF,16V

U3604 IR3555

VIN6 VIN5 VIN4 VIN3 VIN2 VIN1 PGND3 PGND2

NC, TOUT/FLT, IOUT, ZCD_EN#, LGND, PWM, REFIN

SW10 SW9 SW8 SW7 SW6 SW5 SW4 SW3 SW2 SW1

VCC VDRV PGND1 PGND4 GATEL1 GATEL2 BOOST

27,28 VCORE_TOUT

27 VCORE_IOUT5

27 VCORE_PWM5

27,28 VCOREREF

C19016 0.1uF,16V

VDD6V_STBY

C19098 1uF,16V

VCORE_PH5

L5 150nH,70A 59P9872N IND,150nH,70A,0.29mOHM,SMD

VDD_CORE

C19100 22uF,6.3V

VCORE_BST5

C19096 0.22uF,25V

R6539 0,5%

PLACE UNDER DRIVER CHIP

P12V_CORE

C19147 10uF,25V, C19146 10uF,25V, C19108 0.22uF,25V, C19107 10uF,16V, C19106 10uF,16V

U3605 IR3555

27,28 VCORE_TOUT

27 VCORE_IOUT6

27 VCORE_PWM6

27,28 VCOREREF

C19017 0.1uF,16V

VDD6V_STBY

C19103 1uF,16V

VCORE_PH6

L6 150nH,70A 59P9872N IND,150nH,70A,0.29mOHM,SMD

VDD_CORE

C19105 22uF,6.3V

VCORE_BST6

C19101 0.22uF,25V

R6540 0,5%

20 x 22uF/0805 MLCC near ASIC, on bottom layer

VDD_CORE

C19090, C19091, C19092, C19013, C19014, C19015, C19093, C19094, C19095, C19079 — 22uF,6.3V

VDD_CORE

C19081, C19082, C19083, C19084, C19085, C19086, C19087, C19088, C19089, C19080 — 22uF,6.3V

PS0.9V-CORE

CAVIUM

Title: WEDGE100C

Size	Document Number	Rev
C	80-00010-03	2.0

Date: Thursday, December 22, 2016 Sheet 28 of 84

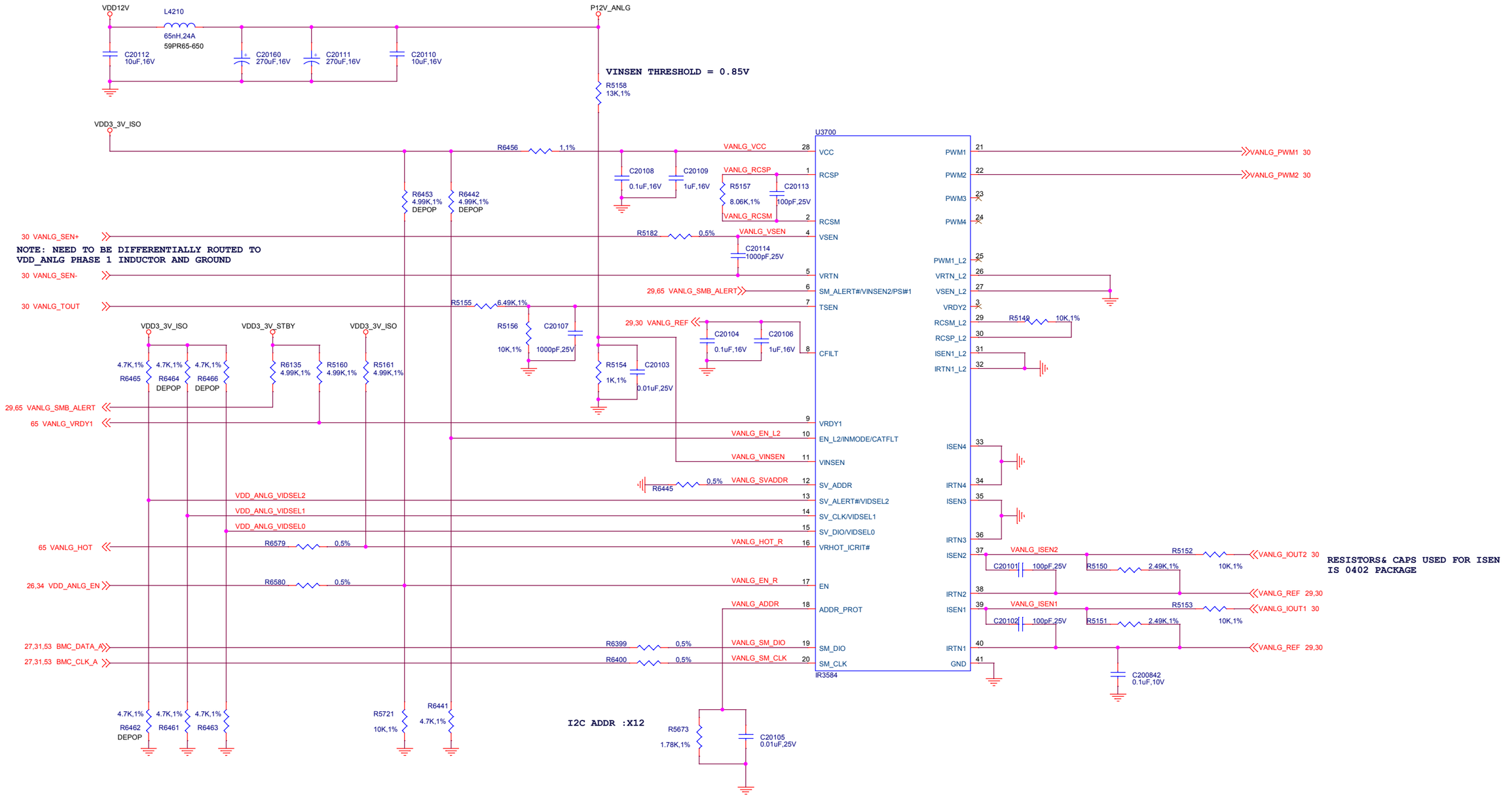

PS1V-ANLG

CAVIUM		
Title: WEDGE100C		
Size: C	Document Number: 80-00010-03	Rev: 2.0
Date: Thursday, December 22, 2016	Sheet 29 of 84	

PLACE UNDER DRIVER CHIP

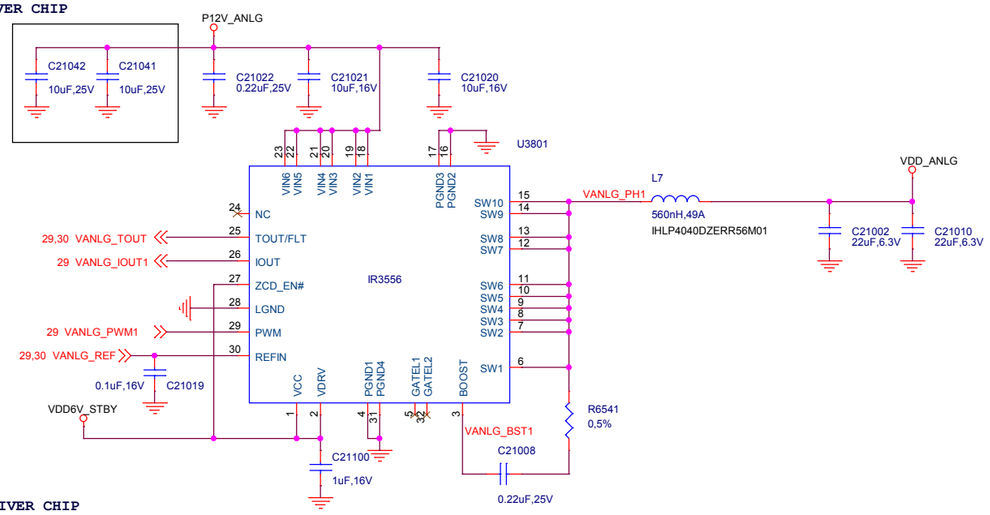

PLACE UNDER DRIVER CHIP

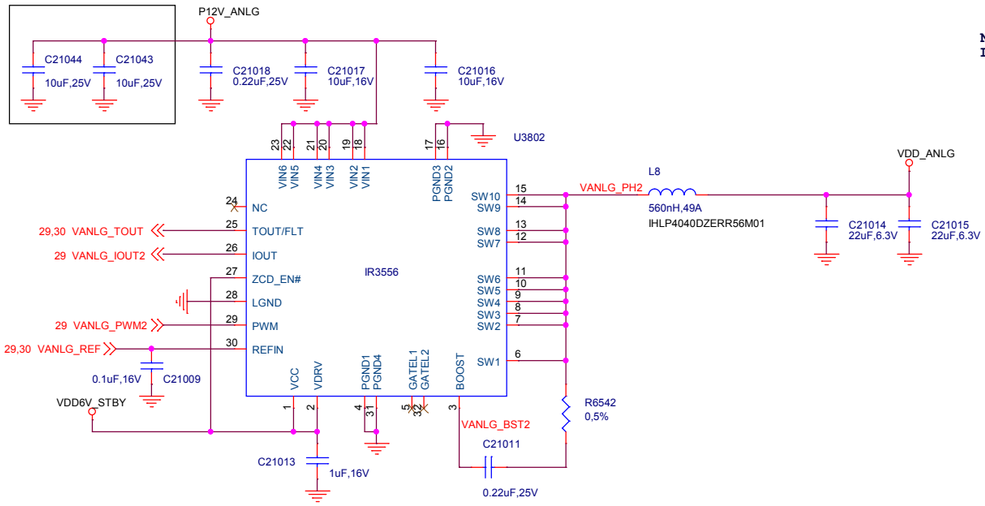

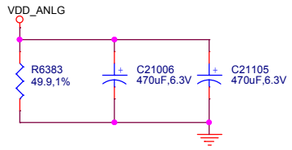

10x10uF near the VR

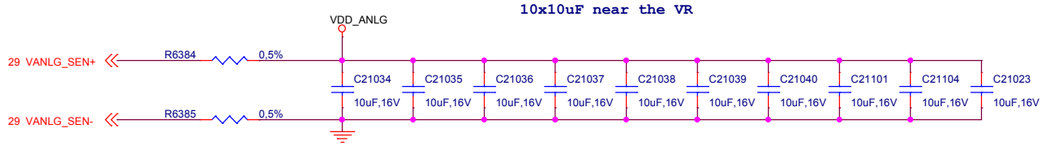

NOTE: THESE RESISTORS NEED TO BE PLACED AT AN OPTIMAL LOCATION NEAR LOAD AND ROUTE DIFFERENTIALLY

PS1V-ANLG

CAVIUM		
Title: WEDGE100C		
Size: C	Document Number: 80-00010-03	Rev: 2.0
Date: Thursday, December 22, 2016	Sheet 30 of 84	

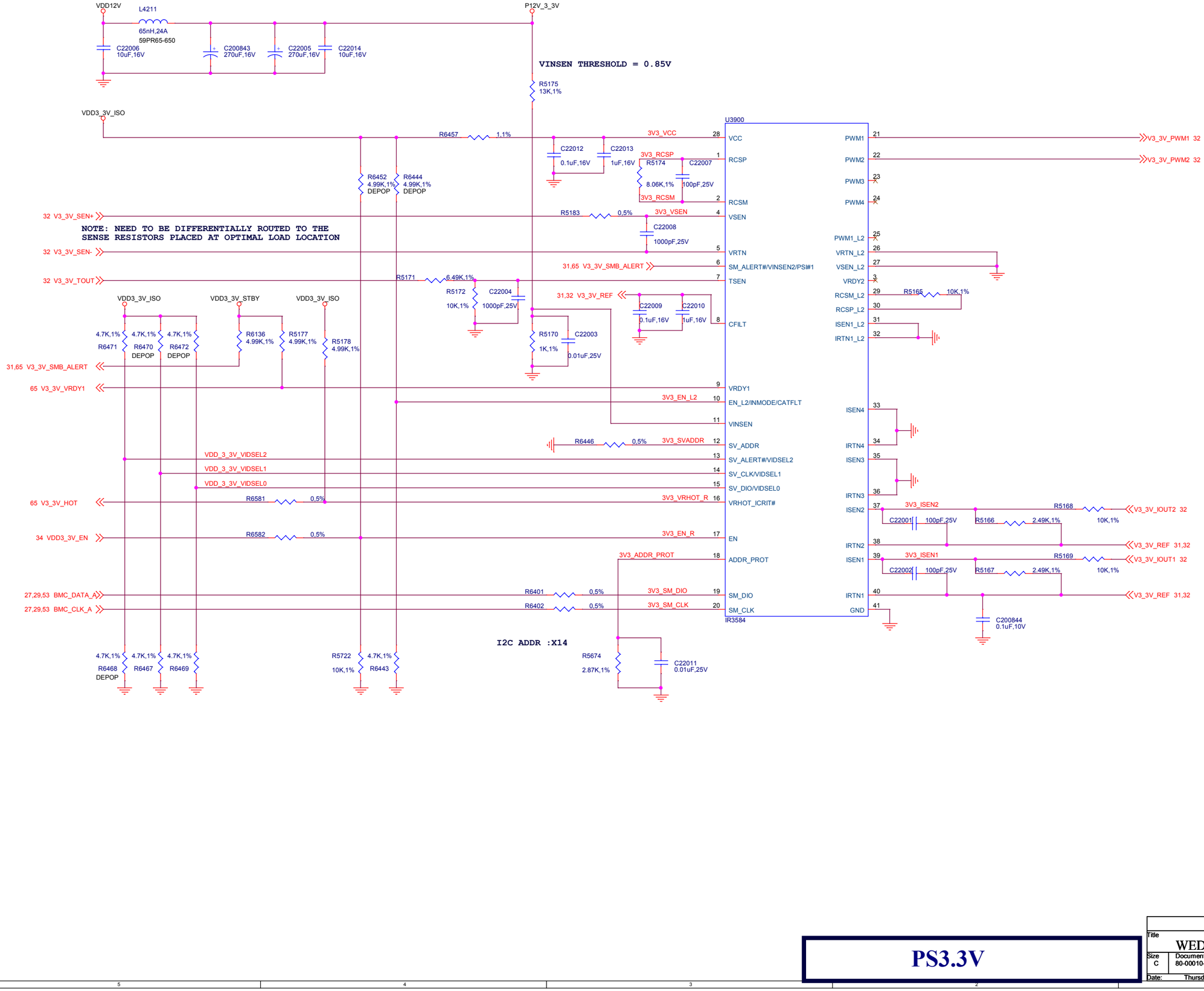

PS3.3V

CAVIUM

Title: WEDGE100C

Size	Document Number	Rev
C	80-00010-03	2.0

Date: Thursday, December 22, 2016 Sheet 31 of 84

PLACE UNDER DRIVER CHIP

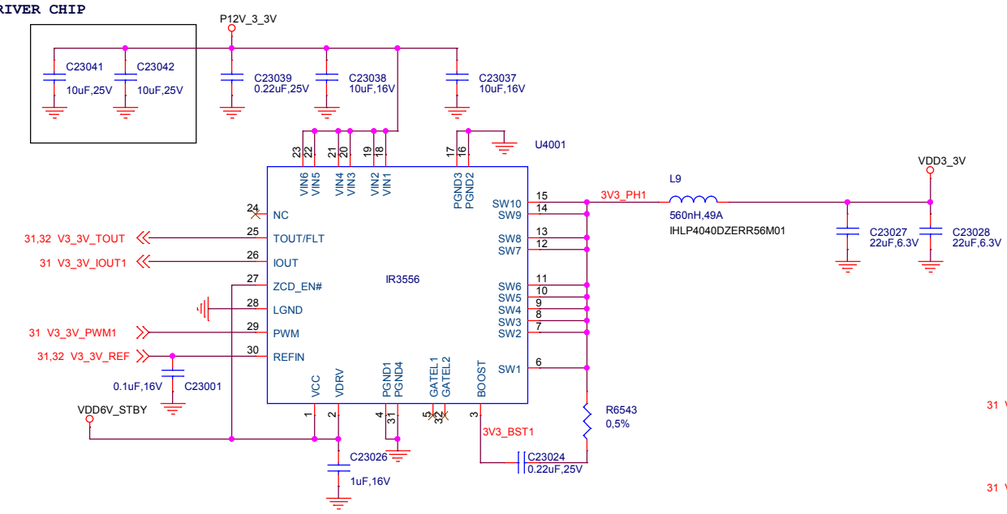

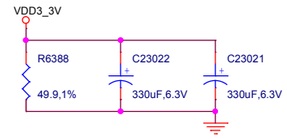

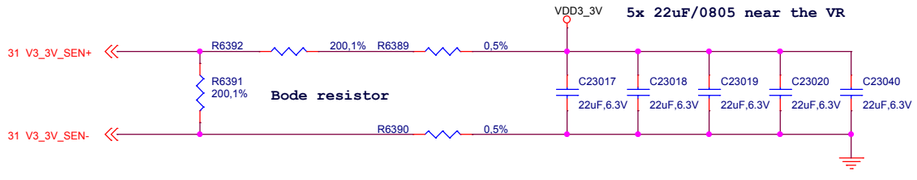

PLACE UNDER DRIVER CHIP

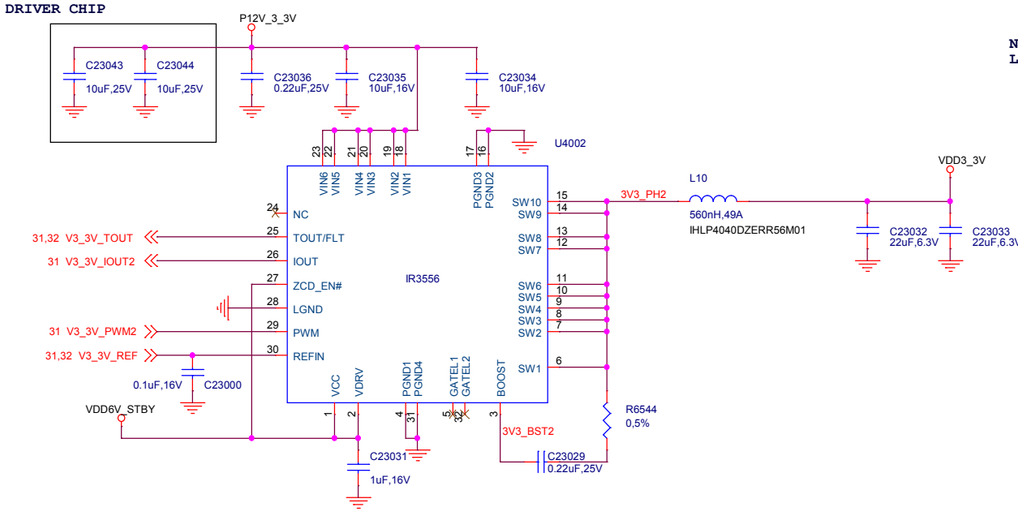

NOTE: THESE RESISTORS NEED TO BE PLACED AT AN OPTIMAL LOCATION NEAR LOAD AND ROUTE DIFFERENTIALLY

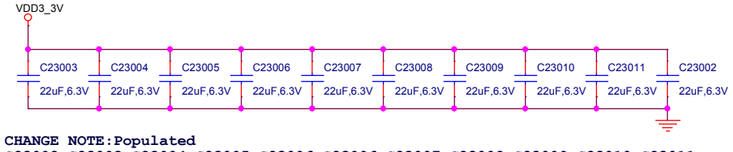

CHANGE NOTE:Populated C23002,C23003,C23004,C23005,C23006,C23006,C23007,C23008,C23009,C23010,C23011

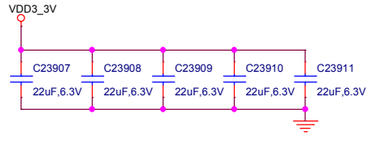

CHANGE NOTE:Added C23907,C23908,C23909,C23910,C23911

PS3.3V

CAVIUM

Title: WEDGE100C

Size	Document Number	Rev
C	80-00010-03	2.0

Date: Thursday, December 22, 2016 Sheet 32 of 84

PS 1.8V ,3A

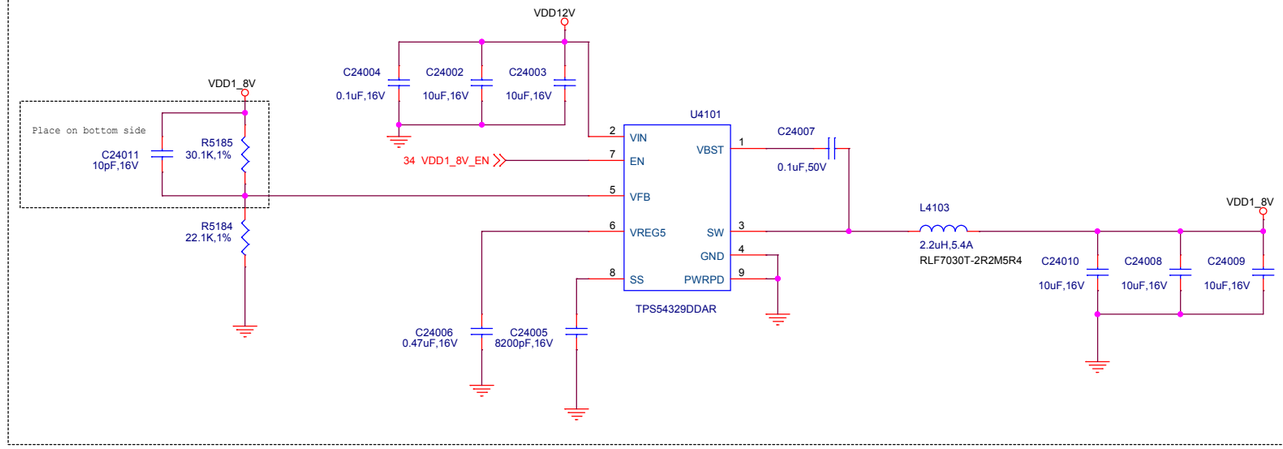

VIN =12V
Device =TPS54329DDAR
Vout =1.8V
Ioutmax = 3A
Softstart = 1.15ms
L= RLF7030T-2R2M5R4(2.2uH,5.4A,DCR=10mOhms)
Cout=GRM21BR61C106KE15L(CER,10UF,0805,16V)

PS 1.8V

CAVIUM		
Title: WEDGE100C		
Size: C	Document Number: 80-00010-03	Rev: 2.0
Date: Thursday, December 22, 2016	Sheet 33 of 84	

NOTE:PWR_STBY_OK = P1_2V_STBY_OK

A PULLDOWN IS PROVIDED TO PWR_STBY_OK SO THAT
TILL CPLD IS PROGRAMMED , PWR_STBY_OK WILL BE LOW

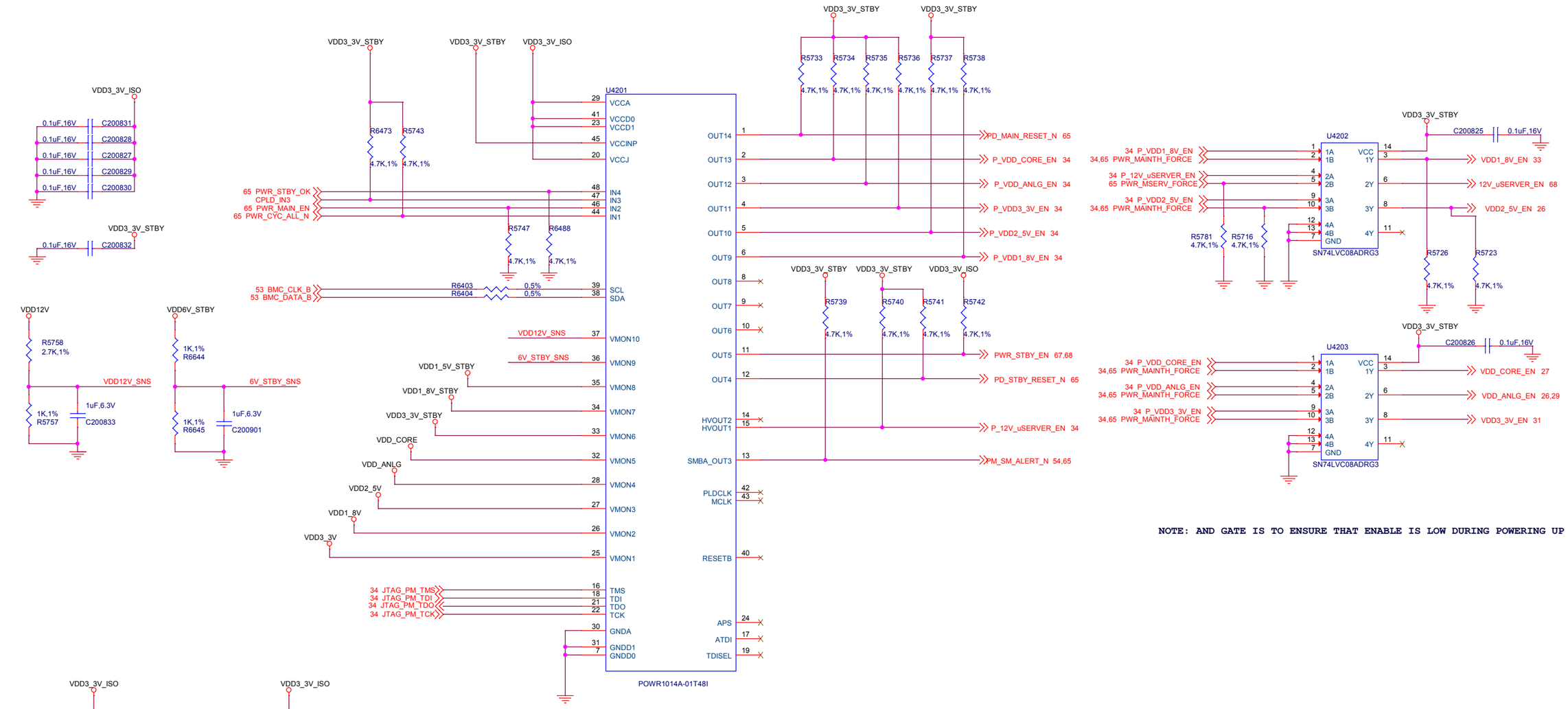

NOTE: AND GATE IS TO ENSURE THAT ENABLE IS LOW DURING POWERING UP

CHANGE NOTE:J4214 changed with 8pin connector PH08RA3BAAB05
Pin5 deleted after accton feedback

POWER MANAGEMENT

CAVIUM		
Title: WEDGE100C		
Size: C	Document Number: 80-00010-03	Rev: 2.0
Date: Thursday, December 22, 2016	Sheet 34 of 84	

REV1 CHANGE NOTE : Deleted SMAs J4221,J4222,J8005,J8006

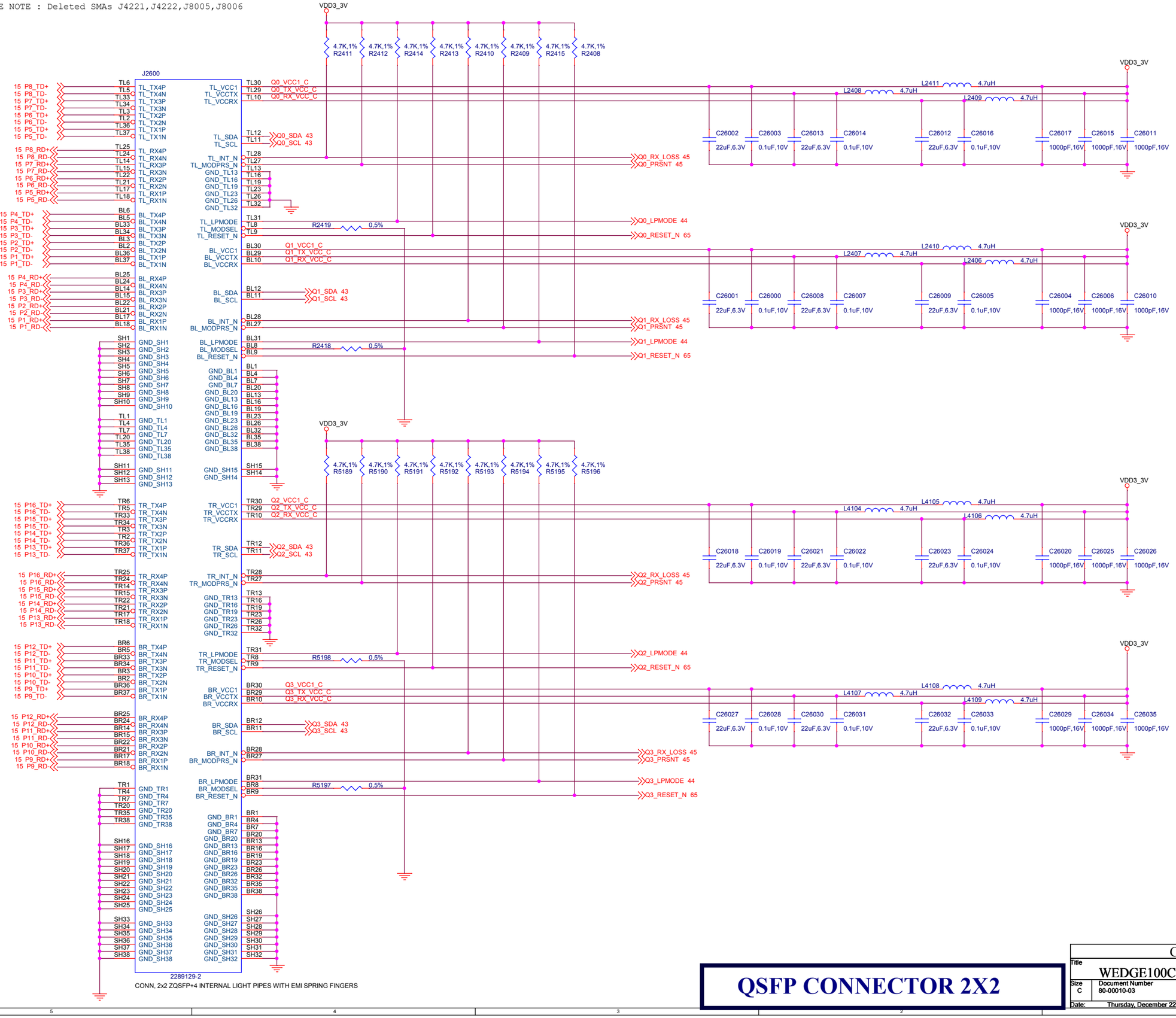

QSFP CONNECTOR 2X2

CAVIUM		
Title: WEDGE100C		
Size: C	Document Number: 80-00010-03	Rev: 2.0
Date: Thursday, December 22, 2016	Sheet 35 of 84	

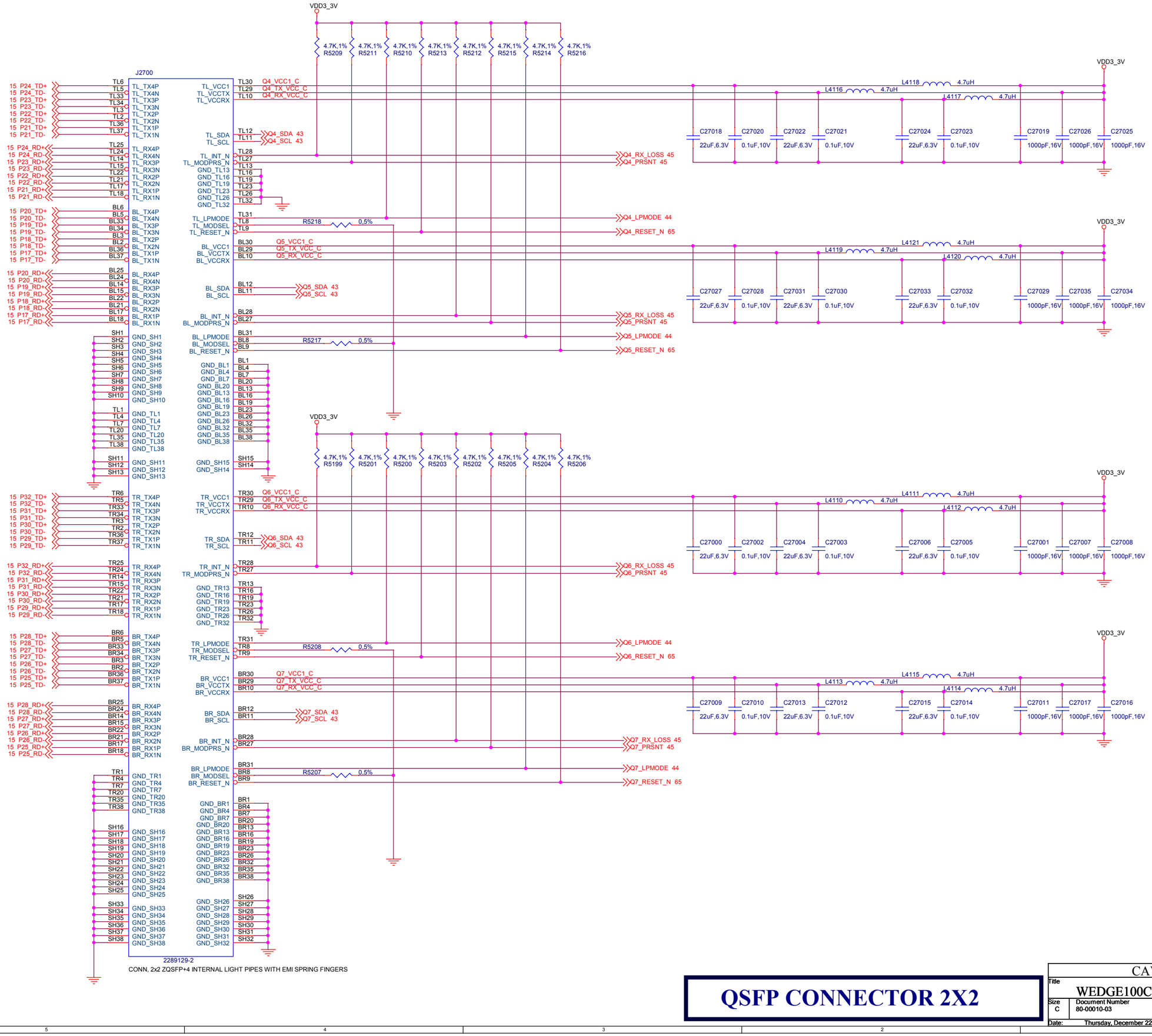
J2700
2289129-2
CONN, 2x2 ZQSFP+4 INTERNAL LIGHT PIPES WITH EMI SPRING FINGERS
VDD3_3V
4.7K,1% R5209
4.7K,1% R5211
4.7K,1% R5210
4.7K,1% R5213
4.7K,1% R5212
4.7K,1% R5215
4.7K,1% R5214
4.7K,1% R5216
4.7K,1% R5199
4.7K,1% R5201
4.7K,1% R5200
4.7K,1% R5203
4.7K,1% R5202
4.7K,1% R5205
4.7K,1% R5204
4.7K,1% R5206
R5218 0,5%
R5217 0,5%
R5208 0,5%
R5207 0,5%
L4116 4.7uH
L4118 4.7uH
L4117 4.7uH
L4119 4.7uH
L4121 4.7uH
L4120 4.7uH
L4110 4.7uH
L4111 4.7uH
L4112 4.7uH
L4113 4.7uH
L4115 4.7uH
L4114 4.7uH
22uF,6.3V
0.1uF,10V
1000pF,16V
Q4_RX_LOSS 45
Q4_PRSNT 45
Q4_LPMODE 44
Q4_RESET_N 65
Q5_RX_LOSS 45
Q5_PRSNT 45
Q5_LPMODE 44
Q5_RESET_N 65
Q6_RX_LOSS 45
Q6_PRSNT 45
Q6_LPMODE 44
Q6_RESET_N 65
Q7_RX_LOSS 45
Q7_PRSNT 45
Q7_LPMODE 44
Q7_RESET_N 65
QSFP CONNECTOR 2X2
CAVIUM
WEDGE100C
Document Number 80-00010-03
Rev 2.0
Thursday, December 22, 2016
Sheet 36 of 84

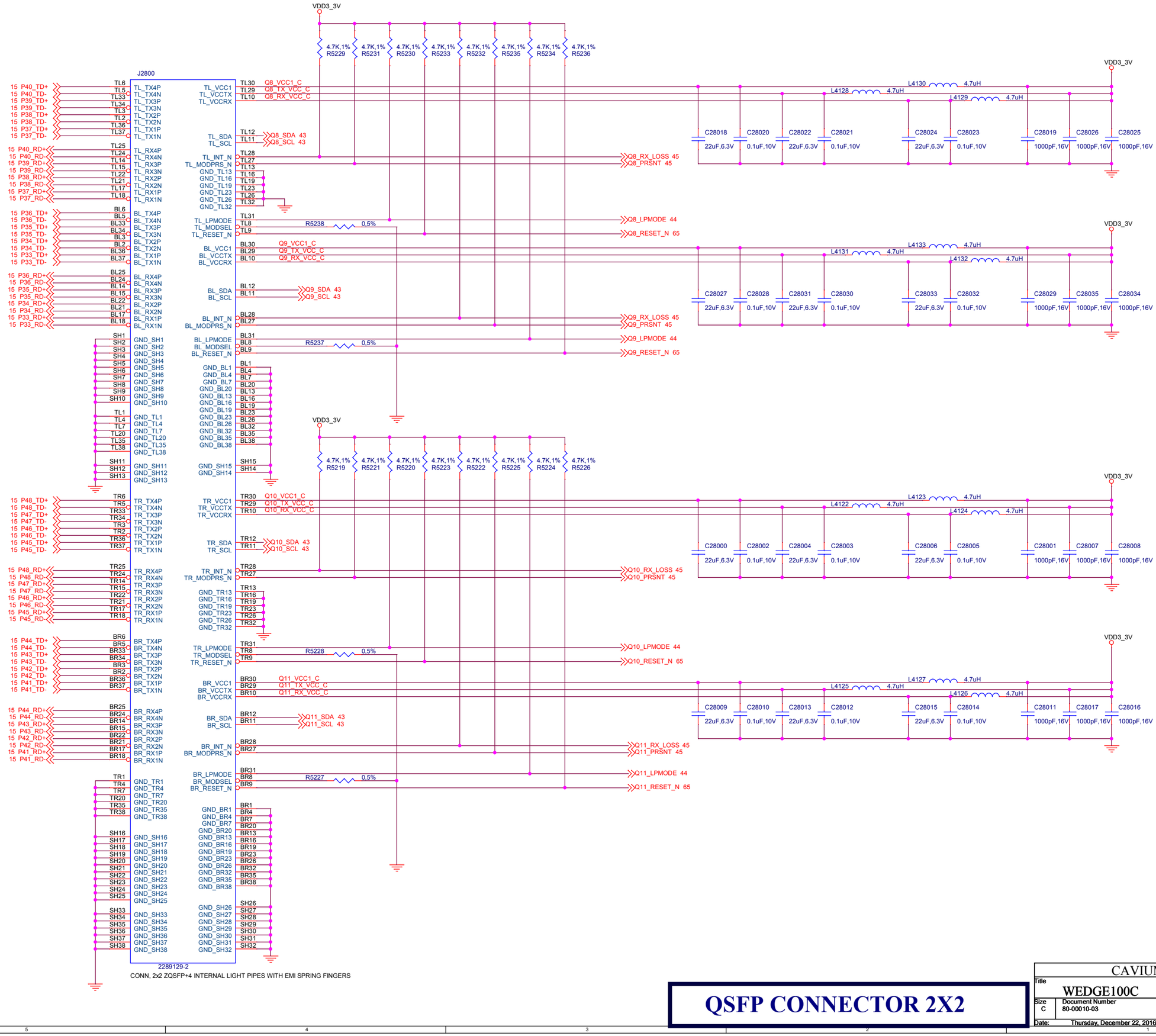
J2800
VDD3_3V
4.7K,1% R5229
4.7K,1% R5231
4.7K,1% R5230
4.7K,1% R5233
4.7K,1% R5232
4.7K,1% R5235
4.7K,1% R5234
4.7K,1% R5236
TL6 TL5 TL33 TL34 TL3 TL2 TL36 TL37
TL_TX4P TL_TX4N TL_TX3P TL_TX3N TL_TX2P TL_TX2N TL_TX1P TL_TX1N
15 P40_TD+ 15 P40_TD- 15 P39_TD+ 15 P39_TD- 15 P38_TD+ 15 P38_TD- 15 P37_TD+ 15 P37_TD-
TL25 TL24 TL14 TL15 TL22 TL21 TL17 TL18
TL_RX4P TL_RX4N TL_RX3P TL_RX3N TL_RX2P TL_RX2N TL_RX1P TL_RX1N
15 P40_RD+ 15 P40_RD- 15 P39_RD+ 15 P39_RD- 15 P38_RD+ 15 P38_RD- 15 P37_RD+ 15 P37_RD-
BL6 BL5 BL33 BL34 BL3 BL2 BL36 BL37
BL_TX4P BL_TX4N BL_TX3P BL_TX3N BL_TX2P BL_TX2N BL_TX1P BL_TX1N
15 P36_TD+ 15 P36_TD- 15 P35_TD+ 15 P35_TD- 15 P34_TD+ 15 P34_TD- 15 P33_TD+ 15 P33_TD-
BL25 BL24 BL14 BL15 BL22 BL21 BL17 BL18
BL_RX4P BL_RX4N BL_RX3P BL_RX3N BL_RX2P BL_RX2N BL_RX1P BL_RX1N
15 P36_RD+ 15 P36_RD- 15 P35_RD+ 15 P35_RD- 15 P34_RD+ 15 P34_RD- 15 P33_RD+ 15 P33_RD-
SH1 SH2 SH3 SH4 SH5 SH6 SH7 SH8 SH9 SH10
GND_SH1 GND_SH2 GND_SH3 GND_SH4 GND_SH5 GND_SH6 GND_SH7 GND_SH8 GND_SH9 GND_SH10
TL1 TL4 TL7 TL20 TL35 TL38
GND_TL1 GND_TL4 GND_TL7 GND_TL20 GND_TL35 GND_TL38
SH11 SH12 SH13
GND_SH11 GND_SH12 GND_SH13
TL_VCC1 TL_VCCTX TL_VCCRX
TL30 TL29 TL10
Q8_VCC1_C Q8_TX_VCC_C Q8_RX_VCC_C
TL_SDA TL_SCL
TL12 TL11
Q8_SDA 43 Q8_SCL 43
TL_INT_N TL_MODPRS_N
TL28 TL27
Q8_RX_LOSS 45 Q8_PRSNT 45
GND_TL13 GND_TL16 GND_TL19 GND_TL23 GND_TL26 GND_TL32
TL13 TL16 TL19 TL23 TL26 TL32
TL_LPMODE TL_MODSEL TL_RESET_N
TL31 TL8 TL9
R5238 0,5%
Q8_LPMODE 44 Q8_RESET_N 65
L4128 4.7uH L4130 4.7uH L4129 4.7uH
C28018 22uF,6.3V C28020 0.1uF,10V C28022 22uF,6.3V C28021 0.1uF,10V C28024 22uF,6.3V C28023 0.1uF,10V C28019 1000pF,16V C28026 1000pF,16V C28025 1000pF,16V
BL_VCC1 BL_VCCTX BL_VCCRX
BL30 BL29 BL10
Q9_VCC1_C Q9_TX_VCC_C Q9_RX_VCC_C
BL_SDA BL_SCL
BL12 BL11
Q9_SDA 43 Q9_SCL 43
BL_INT_N BL_MODPRS_N
BL28 BL27
Q9_RX_LOSS 45 Q9_PRSNT 45
BL_LPMODE BL_MODSEL BL_RESET_N
BL31 BL8 BL9
R5237 0,5%
Q9_LPMODE 44 Q9_RESET_N 65
L4131 4.7uH L4133 4.7uH L4132 4.7uH
C28027 22uF,6.3V C28028 0.1uF,10V C28031 22uF,6.3V C28030 0.1uF,10V C28033 22uF,6.3V C28032 0.1uF,10V C28029 1000pF,16V C28035 1000pF,16V C28034 1000pF,16V
GND_BL1 GND_BL4 GND_BL7 GND_BL20 GND_BL13 GND_BL16 GND_BL19 GND_BL23 GND_BL26 GND_BL32 GND_BL35 GND_BL38
BL1 BL4 BL7 BL20 BL13 BL16 BL19 BL23 BL26 BL32 BL35 BL38
GND_SH15 GND_SH14
SH15 SH14
TR6 TR5 TR33 TR34 TR3 TR2 TR36 TR37
TR_TX4P TR_TX4N TR_TX3P TR_TX3N TR_TX2P TR_TX2N TR_TX1P TR_TX1N
15 P48_TD+ 15 P48_TD- 15 P47_TD+ 15 P47_TD- 15 P46_TD+ 15 P46_TD- 15 P45_TD+ 15 P45_TD-
TR25 TR24 TR14 TR15 TR22 TR21 TR17 TR18
TR_RX4P TR_RX4N TR_RX3P TR_RX3N TR_RX2P TR_RX2N TR_RX1P TR_RX1N
15 P48_RD+ 15 P48_RD- 15 P47_RD+ 15 P47_RD- 15 P46_RD+ 15 P46_RD- 15 P45_RD+ 15 P45_RD-
BR6 BR5 BR33 BR34 BR3 BR2 BR36 BR37
BR_TX4P BR_TX4N BR_TX3P BR_TX3N BR_TX2P BR_TX2N BR_TX1P BR_TX1N
15 P44_TD+ 15 P44_TD- 15 P43_TD+ 15 P43_TD- 15 P42_TD+ 15 P42_TD- 15 P41_TD+ 15 P41_TD-
BR25 BR24 BR14 BR15 BR22 BR21 BR17 BR18
BR_RX4P BR_RX4N BR_RX3P BR_RX3N BR_RX2P BR_RX2N BR_RX1P BR_RX1N
15 P44_RD+ 15 P44_RD- 15 P43_RD+ 15 P43_RD- 15 P42_RD+ 15 P42_RD- 15 P41_RD+ 15 P41_RD-
TR1 TR4 TR7 TR20 TR35 TR38
GND_TR1 GND_TR4 GND_TR7 GND_TR20 GND_TR35 GND_TR38
SH16 SH17 SH18 SH19 SH20 SH21 SH22 SH23 SH24 SH25
GND_SH16 GND_SH17 GND_SH18 GND_SH19 GND_SH20 GND_SH21 GND_SH22 GND_SH23 GND_SH24 GND_SH25
SH33 SH34 SH35 SH36 SH37 SH38
GND_SH33 GND_SH34 GND_SH35 GND_SH36 GND_SH37 GND_SH38
TR_VCC1 TR_VCCTX TR_VCCRX
TR30 TR29 TR10
Q10_VCC1_C Q10_TX_VCC_C Q10_RX_VCC_C
TR_SDA TR_SCL
TR12 TR11
Q10_SDA 43 Q10_SCL 43
TR_INT_N TR_MODPRS_N
TR28 TR27
Q10_RX_LOSS 45 Q10_PRSNT 45
GND_TR13 GND_TR16 GND_TR19 GND_TR23 GND_TR26 GND_TR32
TR13 TR16 TR19 TR23 TR26 TR32
TR_LPMODE TR_MODSEL TR_RESET_N
TR31 TR8 TR9
R5228 0,5%
Q10_LPMODE 44 Q10_RESET_N 65
L4122 4.7uH L4123 4.7uH L4124 4.7uH
C28000 22uF,6.3V C28002 0.1uF,10V C28004 22uF,6.3V C28003 0.1uF,10V C28006 22uF,6.3V C28005 0.1uF,10V C28001 1000pF,16V C28007 1000pF,16V C28008 1000pF,16V
BR_VCC1 BR_VCCTX BR_VCCRX
BR30 BR29 BR10
Q11_VCC1_C Q11_TX_VCC_C Q11_RX_VCC_C
BR_SDA BR_SCL
BR12 BR11
Q11_SDA 43 Q11_SCL 43
BR_INT_N BR_MODPRS_N
BR28 BR27
Q11_RX_LOSS 45 Q11_PRSNT 45
BR_LPMODE BR_MODSEL BR_RESET_N
BR31 BR8 BR9
R5227 0,5%
Q11_LPMODE 44 Q11_RESET_N 65
L4125 4.7uH L4127 4.7uH L4126 4.7uH
C28009 22uF,6.3V C28010 0.1uF,10V C28013 22uF,6.3V C28012 0.1uF,10V C28015 22uF,6.3V C28014 0.1uF,10V C28011 1000pF,16V C28017 1000pF,16V C28016 1000pF,16V
GND_BR1 GND_BR4 GND_BR7 GND_BR20 GND_BR13 GND_BR16 GND_BR19 GND_BR23 GND_BR26 GND_BR32 GND_BR35 GND_BR38
BR1 BR4 BR7 BR20 BR13 BR16 BR19 BR23 BR26 BR32 BR35 BR38
GND_SH26 GND_SH27 GND_SH28 GND_SH29 GND_SH30 GND_SH31 GND_SH32
SH26 SH27 SH28 SH29 SH30 SH31 SH32
2289129-2
CONN, 2x2 ZQSFP+4 INTERNAL LIGHT PIPES WITH EMI SPRING FINGERS
QSFP CONNECTOR 2X2
CAVIUM
Title
WEDGE100C
Size C
Document Number 80-00010-03
Rev 2.0
Date: Thursday, December 22, 2016
Sheet 37 of 84

QSFP CONNECTOR 2X2

J2900

2289129-2

CONN, 2x2 ZQSFP+4 INTERNAL LIGHT PIPES WITH EMI SPRING FINGERS

CAVIUM		
Title: WEDGE100C		
Size: C	Document Number: 80-00010-03	Rev: 2.0
Date: Thursday, December 22, 2016	Sheet 38 of 84	

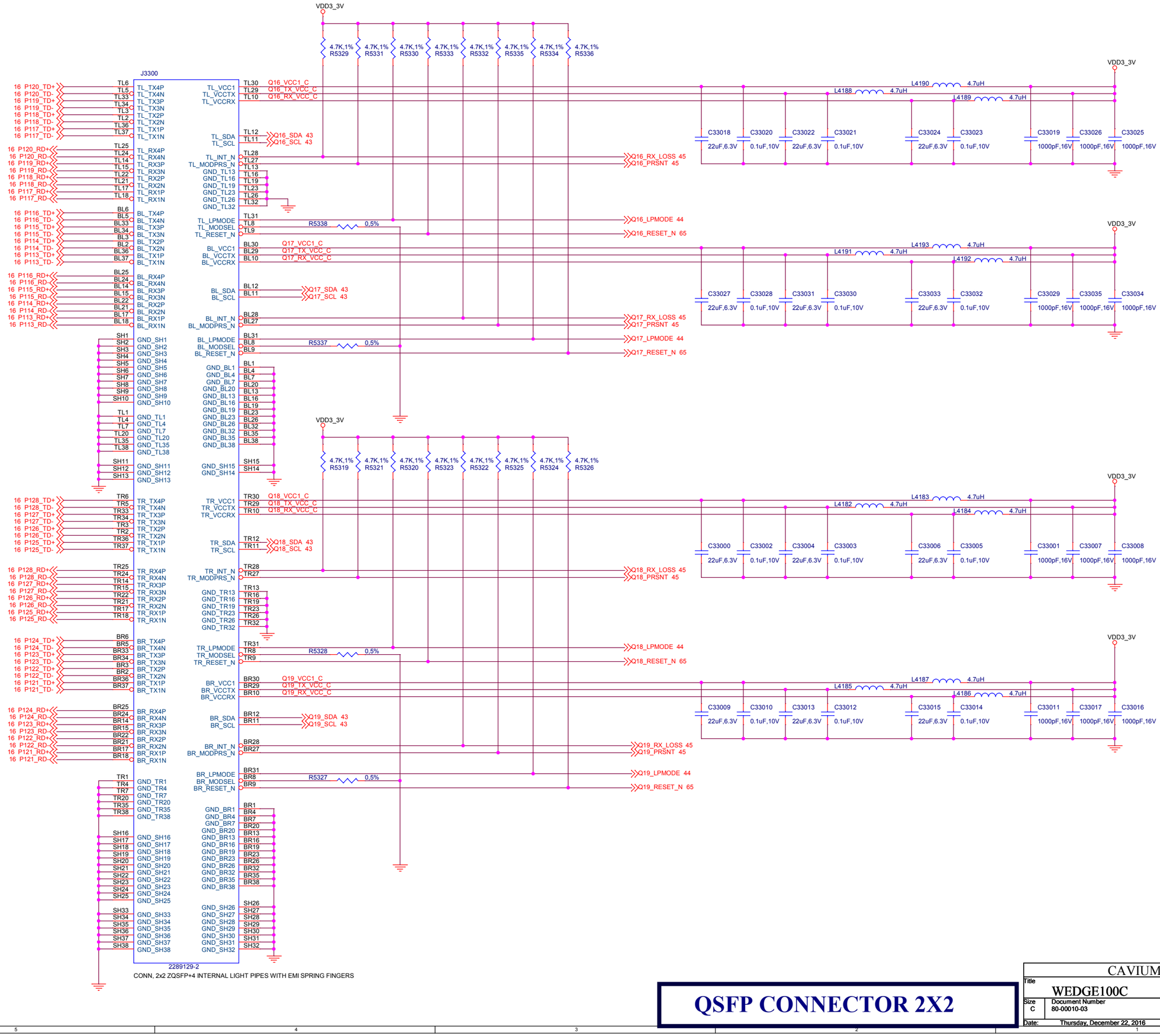

QSFP CONNECTOR 2X2

CAVIUM		
Title: WEDGE100C		
Size: C	Document Number: 80-00010-03	Rev: 2.0
Date: Thursday, December 22, 2016	Sheet 39 of 84	

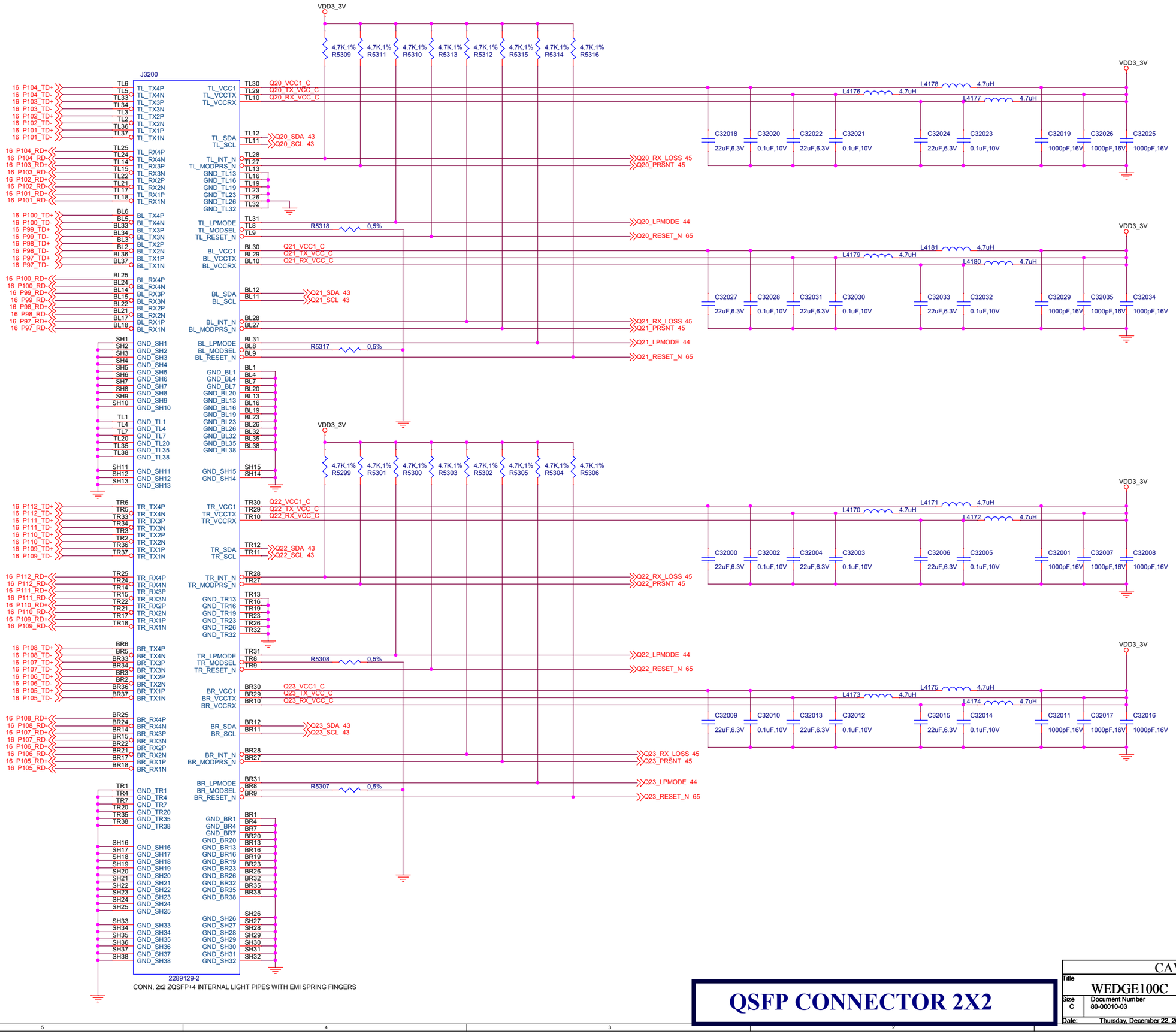

QSFP CONNECTOR 2X2

CAVIUM		
Title: WEDGE100C		
Size: C	Document Number: 80-00010-03	Rev: 2.0
Date: Thursday, December 22, 2016	Sheet 40 of 84	

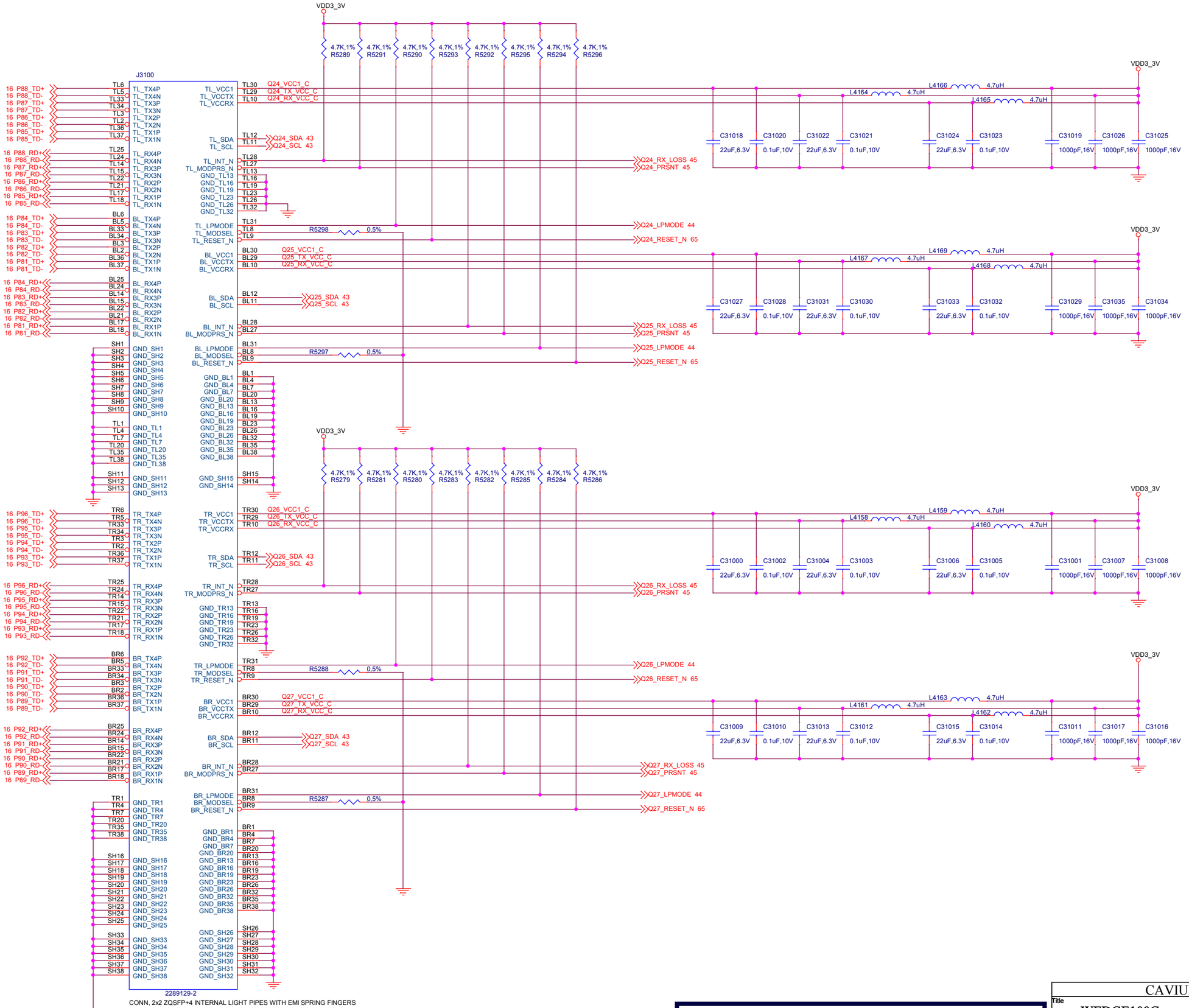
J3100
VDD3_3V
4.7K,1% R5289
4.7K,1% R5291
4.7K,1% R5290
4.7K,1% R5293
4.7K,1% R5292
4.7K,1% R5295
4.7K,1% R5294
4.7K,1% R5296
TL_TX4P TL_TX4N TL_TX3P TL_TX3N TL_TX2P TL_TX2N TL_TX1P TL_TX1N
TL_RX4P TL_RX4N TL_RX3P TL_RX3N TL_RX2P TL_RX2N TL_RX1P TL_RX1N
TL_VCC1 TL_VCCTX TL_VCCRX
TL_SDA TL_SCL
TL_INT_N TL_MODPRS_N
TL_LPMODE TL_MODSEL TL_RESET_N
Q24_VCC1_C Q24_TX_VCC_C Q24_RX_VCC_C
Q24_SDA 43 Q24_SCL 43
Q24_RX_LOSS 45 Q24_PRSNT 45
Q24_LPMODE 44 Q24_RESET_N 65
R5298 0,5%
L4164 4.7uH L4166 4.7uH L4165 4.7uH L4167 4.7uH L4169 4.7uH L4168 4.7uH
C31018 C31020 C31022 C31021 C31024 C31023 C31019 C31026 C31025
C31027 C31028 C31031 C31030 C31033 C31032 C31029 C31035 C31034
22uF,6.3V 0.1uF,10V 1000pF,16V
BL_TX4P BL_TX4N BL_TX3P BL_TX3N BL_TX2P BL_TX2N BL_TX1P BL_TX1N
BL_RX4P BL_RX4N BL_RX3P BL_RX3N BL_RX2P BL_RX2N BL_RX1P BL_RX1N
BL_VCC1 BL_VCCTX BL_VCCRX
BL_SDA BL_SCL
BL_INT_N BL_MODPRS_N
BL_LPMODE BL_MODSEL BL_RESET_N
Q25_VCC1_C Q25_TX_VCC_C Q25_RX_VCC_C
Q25_SDA 43 Q25_SCL 43
Q25_RX_LOSS 45 Q25_PRSNT 45
Q25_LPMODE 44 Q25_RESET_N 65
R5297 0,5%
GND_SH1 GND_SH2 GND_SH3 GND_SH4 GND_SH5 GND_SH6 GND_SH7 GND_SH8 GND_SH9 GND_SH10
GND_TL1 GND_TL4 GND_TL7 GND_TL20 GND_TL35 GND_TL38
GND_SH11 GND_SH12 GND_SH13
GND_TL13 GND_TL16 GND_TL19 GND_TL23 GND_TL26 GND_TL32
GND_BL1 GND_BL4 GND_BL7 GND_BL20 GND_BL13 GND_BL16 GND_BL19 GND_BL23 GND_BL26 GND_BL32 GND_BL35 GND_BL38
GND_SH15 GND_SH14
4.7K,1% R5279
4.7K,1% R5281
4.7K,1% R5280
4.7K,1% R5283
4.7K,1% R5282
4.7K,1% R5285
4.7K,1% R5284
4.7K,1% R5286
TR_TX4P TR_TX4N TR_TX3P TR_TX3N TR_TX2P TR_TX2N TR_TX1P TR_TX1N
TR_RX4P TR_RX4N TR_RX3P TR_RX3N TR_RX2P TR_RX2N TR_RX1P TR_RX1N
TR_VCC1 TR_VCCTX TR_VCCRX
TR_SDA TR_SCL
TR_INT_N TR_MODPRS_N
TR_LPMODE TR_MODSEL TR_RESET_N
Q26_VCC1_C Q26_TX_VCC_C Q26_RX_VCC_C
Q26_SDA 43 Q26_SCL 43
Q26_RX_LOSS 45 Q26_PRSNT 45
Q26_LPMODE 44 Q26_RESET_N 65
R5288 0,5%
L4158 4.7uH L4159 4.7uH L4160 4.7uH L4161 4.7uH L4163 4.7uH L4162 4.7uH
C31000 C31002 C31004 C31003 C31006 C31005 C31001 C31007 C31008
C31009 C31010 C31013 C31012 C31015 C31014 C31011 C31017 C31016
BR_TX4P BR_TX4N BR_TX3P BR_TX3N BR_TX2P BR_TX2N BR_TX1P BR_TX1N
BR_RX4P BR_RX4N BR_RX3P BR_RX3N BR_RX2P BR_RX2N BR_RX1P BR_RX1N
BR_VCC1 BR_VCCTX BR_VCCRX
BR_SDA BR_SCL
BR_INT_N BR_MODPRS_N
BR_LPMODE BR_MODSEL BR_RESET_N
Q27_VCC1_C Q27_TX_VCC_C Q27_RX_VCC_C
Q27_SDA 43 Q27_SCL 43
Q27_RX_LOSS 45 Q27_PRSNT 45
Q27_LPMODE 44 Q27_RESET_N 65
R5287 0,5%
GND_TR1 GND_TR4 GND_TR7 GND_TR20 GND_TR35 GND_TR38
GND_SH16 GND_SH17 GND_SH18 GND_SH19 GND_SH20 GND_SH21 GND_SH22 GND_SH23 GND_SH24 GND_SH25
GND_SH33 GND_SH34 GND_SH35 GND_SH36 GND_SH37 GND_SH38
GND_BR1 GND_BR4 GND_BR7 GND_BR20 GND_BR13 GND_BR16 GND_BR19 GND_BR23 GND_BR26 GND_BR32 GND_BR35 GND_BR38
GND_SH26 GND_SH27 GND_SH28 GND_SH29 GND_SH30 GND_SH31 GND_SH32
2289129-2
CONN, 2x2 ZQSFP+4 INTERNAL LIGHT PIPES WITH EMI SPRING FINGERS
QSFP CONNECTOR 2X2
CAVIUM
Title
WEDGE100C
Size C
Document Number 80-00010-03
Rev 2.0
Date: Thursday, December 22, 2016
Sheet 41 of 84

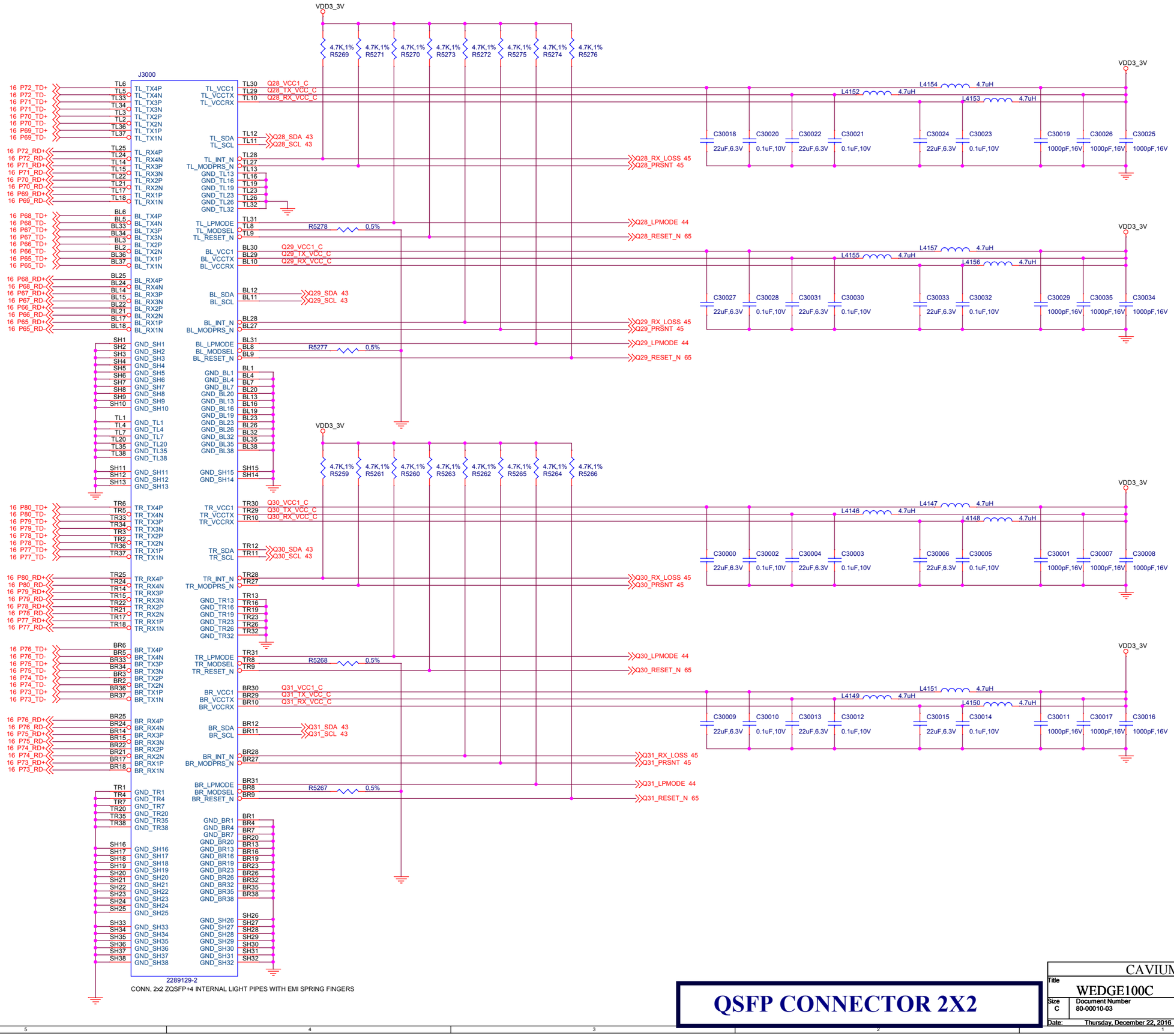
J3000
2289129-2
CONN, 2x2 ZQSFP+4 INTERNAL LIGHT PIPES WITH EMI SPRING FINGERS
VDD3_3V
4.7K,1% R5269
4.7K,1% R5271
4.7K,1% R5270
4.7K,1% R5273
4.7K,1% R5272
4.7K,1% R5275
4.7K,1% R5274
4.7K,1% R5276
TL_TX4P TL_TX4N TL_TX3P TL_TX3N TL_TX2P TL_TX2N TL_TX1P TL_TX1N
TL_RX4P TL_RX4N TL_RX3P TL_RX3N TL_RX2P TL_RX2N TL_RX1P TL_RX1N
TL_VCC1 TL_VCCTX TL_VCCRX
TL_SDA TL_SCL
TL_INT_N TL_MODPRS_N
TL_LPMODE TL_MODSEL TL_RESET_N
GND_TL13 GND_TL16 GND_TL19 GND_TL23 GND_TL26 GND_TL32
Q28_VCC1_C Q28_TX_VCC_C Q28_RX_VCC_C
Q28_SDA 43 Q28_SCL 43
Q28_RX_LOSS 45 Q28_PRSNT 45
Q28_LPMODE 44 Q28_RESET_N 65
R5278 0,5%
L4154 4.7uH L4152 4.7uH L4153 4.7uH
C30018 22uF,6.3V C30020 0.1uF,10V C30022 22uF,6.3V C30021 0.1uF,10V
C30024 22uF,6.3V C30023 0.1uF,10V
C30019 1000pF,16V C30026 1000pF,16V C30025 1000pF,16V
BL_TX4P BL_TX4N BL_TX3P BL_TX3N BL_TX2P BL_TX2N BL_TX1P BL_TX1N
BL_RX4P BL_RX4N BL_RX3P BL_RX3N BL_RX2P BL_RX2N BL_RX1P BL_RX1N
BL_VCC1 BL_VCCTX BL_VCCRX
BL_SDA BL_SCL
BL_INT_N BL_MODPRS_N
BL_LPMODE BL_MODSEL BL_RESET_N
GND_BL1 GND_BL4 GND_BL7 GND_BL20 GND_BL13 GND_BL16 GND_BL19 GND_BL23 GND_BL26 GND_BL32 GND_BL35 GND_BL38
Q29_VCC1_C Q29_TX_VCC_C Q29_RX_VCC_C
Q29_SDA 43 Q29_SCL 43
Q29_RX_LOSS 45 Q29_PRSNT 45
Q29_LPMODE 44 Q29_RESET_N 65
R5277 0,5%
L4157 4.7uH L4155 4.7uH L4156 4.7uH
C30027 22uF,6.3V C30028 0.1uF,10V C30031 22uF,6.3V C30030 0.1uF,10V
C30033 22uF,6.3V C30032 0.1uF,10V
C30029 1000pF,16V C30035 1000pF,16V C30034 1000pF,16V
SH1 SH2 SH3 SH4 SH5 SH6 SH7 SH8 SH9 SH10 SH11 SH12 SH13
GND_SH1 GND_SH2 GND_SH3 GND_SH4 GND_SH5 GND_SH6 GND_SH7 GND_SH8 GND_SH9 GND_SH10 GND_SH11 GND_SH12 GND_SH13
SH15 SH14
TL1 TL4 TL7 TL20 TL35 TL38
GND_TL1 GND_TL4 GND_TL7 GND_TL20 GND_TL35 GND_TL38
BL1 BL4 BL7 BL20 BL13 BL16 BL19 BL23 BL26 BL32 BL35 BL38
TR_TX4P TR_TX4N TR_TX3P TR_TX3N TR_TX2P TR_TX2N TR_TX1P TR_TX1N
TR_RX4P TR_RX4N TR_RX3P TR_RX3N TR_RX2P TR_RX2N TR_RX1P TR_RX1N
TR_VCC1 TR_VCCTX TR_VCCRX
TR_SDA TR_SCL
TR_INT_N TR_MODPRS_N
TR_LPMODE TR_MODSEL TR_RESET_N
GND_TR13 GND_TR16 GND_TR19 GND_TR23 GND_TR26 GND_TR32
Q30_VCC1_C Q30_TX_VCC_C Q30_RX_VCC_C
Q30_SDA 43 Q30_SCL 43
Q30_RX_LOSS 45 Q30_PRSNT 45
Q30_LPMODE 44 Q30_RESET_N 65
R5268 0,5%
L4147 4.7uH L4146 4.7uH L4148 4.7uH
C30000 22uF,6.3V C30002 0.1uF,10V C30004 22uF,6.3V C30003 0.1uF,10V
C30006 22uF,6.3V C30005 0.1uF,10V
C30001 1000pF,16V C30007 1000pF,16V C30008 1000pF,16V
BR_TX4P BR_TX4N BR_TX3P BR_TX3N BR_TX2P BR_TX2N BR_TX1P BR_TX1N
BR_RX4P BR_RX4N BR_RX3P BR_RX3N BR_RX2P BR_RX2N BR_RX1P BR_RX1N
BR_VCC1 BR_VCCTX BR_VCCRX
BR_SDA BR_SCL
BR_INT_N BR_MODPRS_N
BR_LPMODE BR_MODSEL BR_RESET_N
GND_BR1 GND_BR4 GND_BR7 GND_BR20 GND_BR13 GND_BR16 GND_BR19 GND_BR23 GND_BR26 GND_BR32 GND_BR35 GND_BR38
Q31_VCC1_C Q31_TX_VCC_C Q31_RX_VCC_C
Q31_SDA 43 Q31_SCL 43
Q31_RX_LOSS 45 Q31_PRSNT 45
Q31_LPMODE 44 Q31_RESET_N 65
R5267 0,5%
L4151 4.7uH L4149 4.7uH L4150 4.7uH
C30009 22uF,6.3V C30010 0.1uF,10V C30013 22uF,6.3V C30012 0.1uF,10V
C30015 22uF,6.3V C30014 0.1uF,10V
C30011 1000pF,16V C30017 1000pF,16V C30016 1000pF,16V
SH16 SH17 SH18 SH19 SH20 SH21 SH22 SH23 SH24 SH25 SH33 SH34 SH35 SH36 SH37 SH38
GND_SH16 GND_SH17 GND_SH18 GND_SH19 GND_SH20 GND_SH21 GND_SH22 GND_SH23 GND_SH24 GND_SH25 GND_SH33 GND_SH34 GND_SH35 GND_SH36 GND_SH37 GND_SH38
SH26 SH27 SH28 SH29 SH30 SH31 SH32
TR1 TR4 TR7 TR20 TR35 TR38
GND_TR1 GND_TR4 GND_TR7 GND_TR20 GND_TR35 GND_TR38
P72_TD+ P72_TD- P71_TD+ P71_TD- P70_TD+ P70_TD- P69_TD+ P69_TD-
P72_RD+ P72_RD- P71_RD+ P71_RD- P70_RD+ P70_RD- P69_RD+ P69_RD-
P68_TD+ P68_TD- P67_TD+ P67_TD- P66_TD- P65_TD+ P65_TD-
P68_RD+ P68_RD- P67_RD+ P67_RD- P66_RD+ P66_RD- P65_RD+ P65_RD-
P80_TD+ P80_TD- P79_TD+ P79_TD- P78_TD- P77_TD+ P77_TD-
P80_RD+ P80_RD- P79_RD+ P79_RD- P78_RD+ P78_RD- P77_RD+ P77_RD-
P76_TD+ P76_TD- P75_TD+ P75_TD- P74_TD+ P74_TD- P73_TD+ P73_TD-
P76_RD+ P76_RD- P75_RD+ P75_RD- P74_RD+ P74_RD- P73_RD+ P73_RD-
CAVIUM
WEDGE100C
QSFP CONNECTOR 2X2
Size C
Document Number 80-00010-03
Rev 2.0
Date: Thursday, December 22, 2016
Sheet 42 of 84

QSFP I2C INTERFACE

I2C ADDRESS=0X70

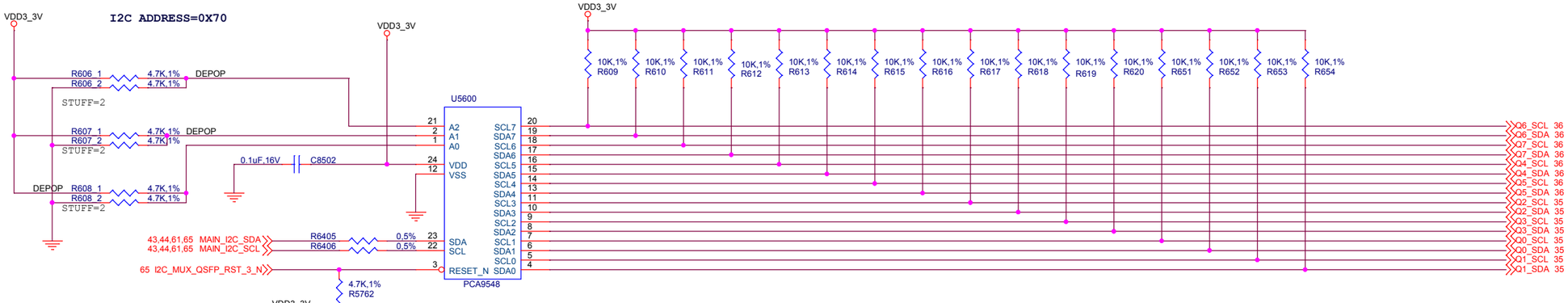

I2C ADDRESS=0X71

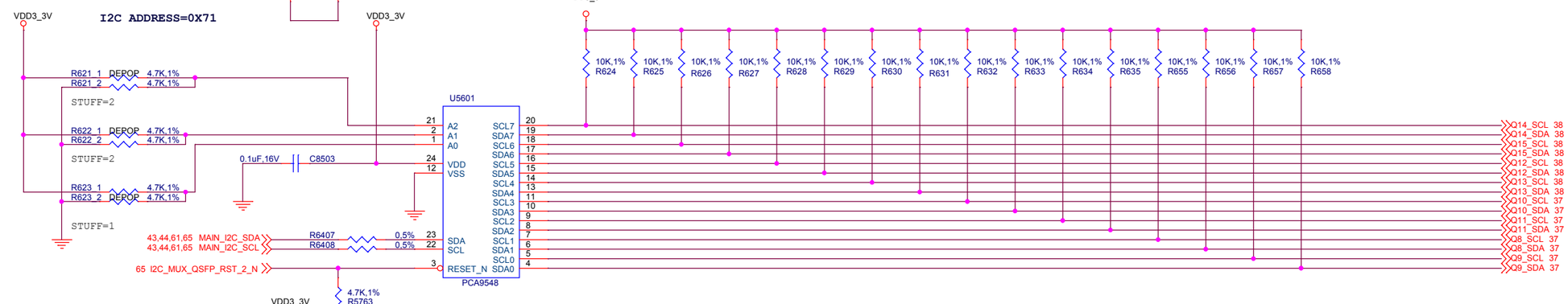

I2C ADDRESS=0X72

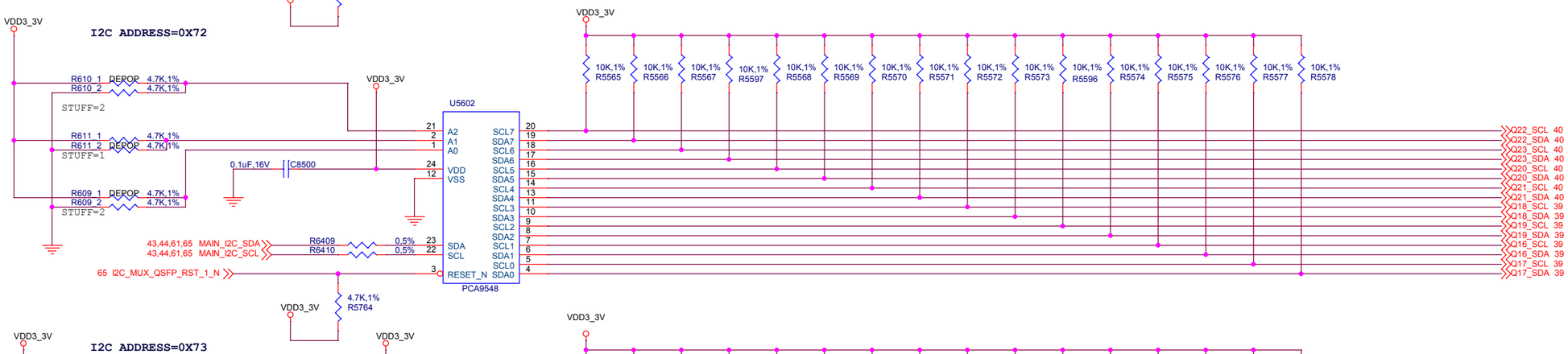

I2C ADDRESS=0X73

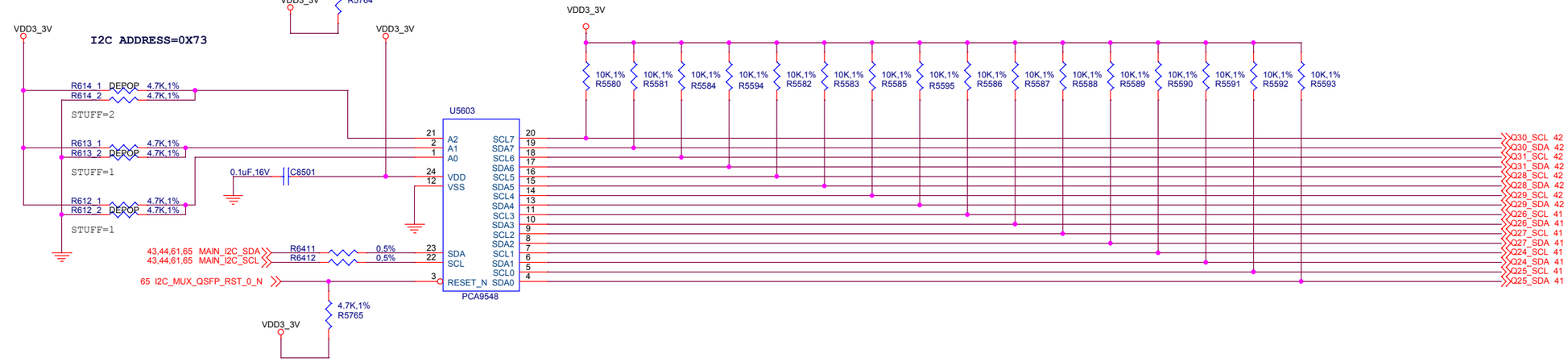

Title	CAVIUM WEDGE100C	
Size C	Document Number 80-00010-03	Rev 2.0
Date: Thursday, December 22, 2016	Sheet 43 of 84	

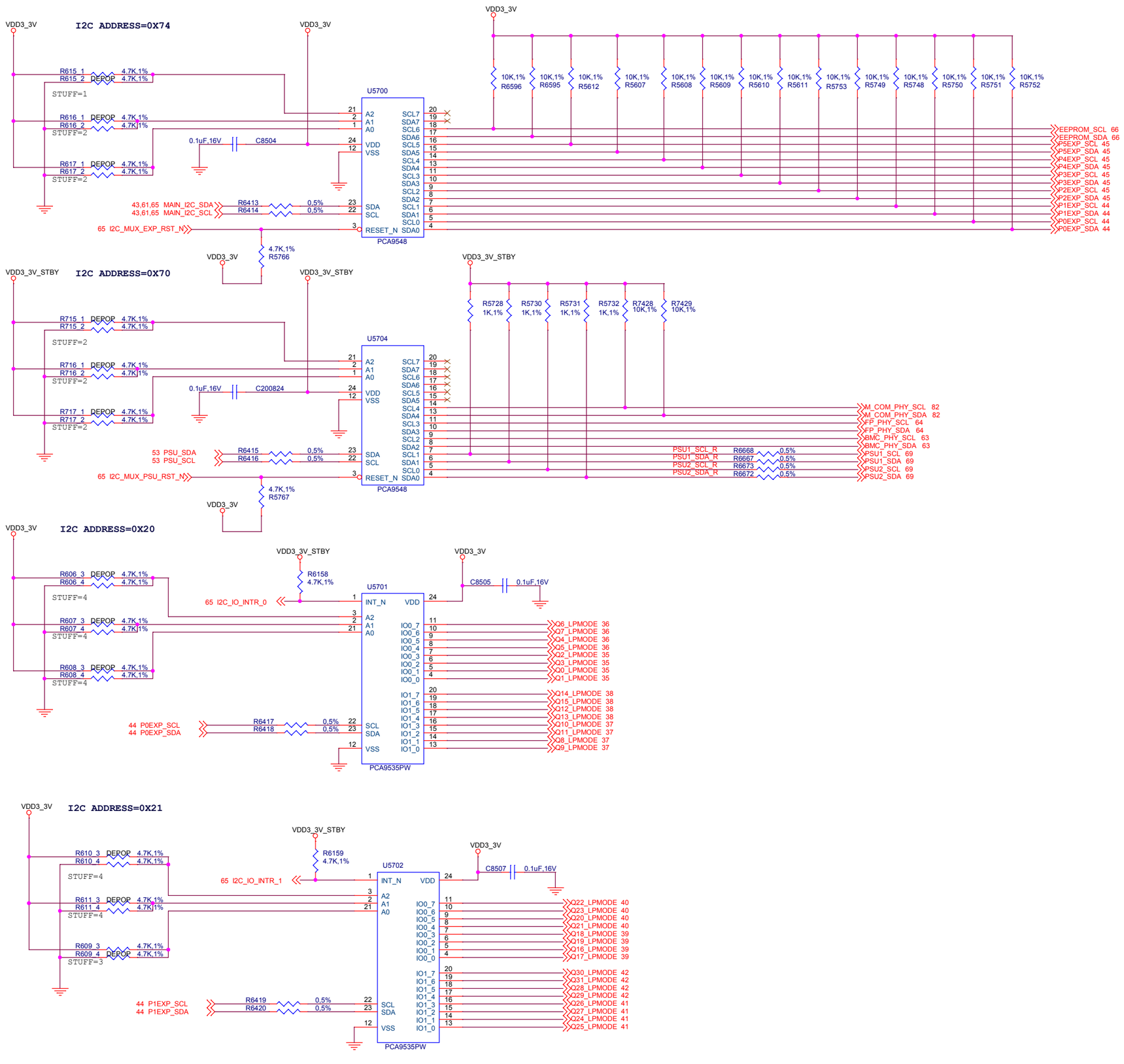

QSFP I2C EXPANDER

CAVIUM		
Title: WEDGE100C		
Size: C	Document Number: 80-00010-03	Rev: 2.0
Date: Thursday, December 22, 2016	Sheet 44 of 84	

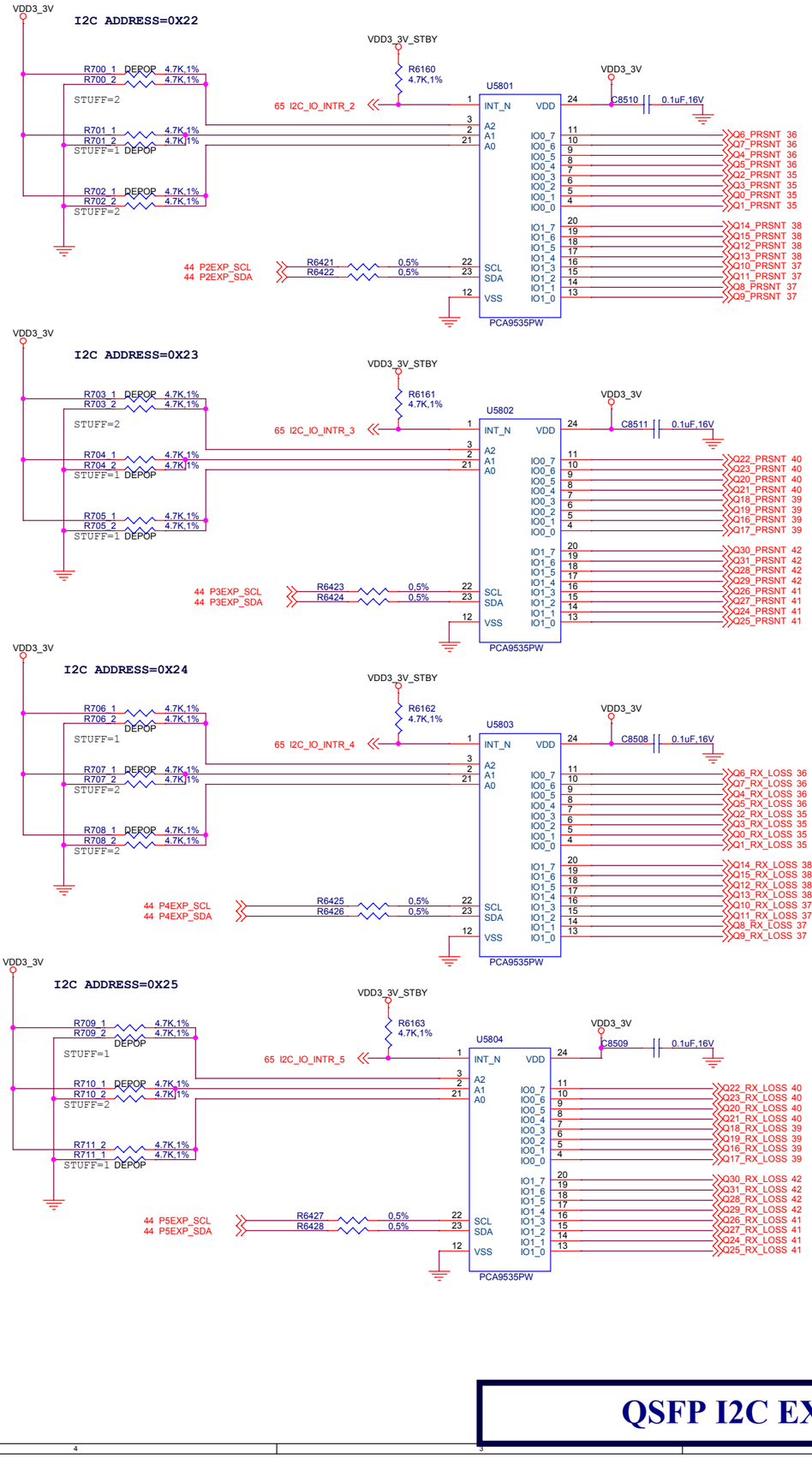

QSFP I2C EXPANDER

CAVIUM		
Title: WEDGE100C		
Size: C	Document Number: 80-00010-03	Rev: 2.0
Date: Thursday, December 22, 2016	Sheet 45 of 84	

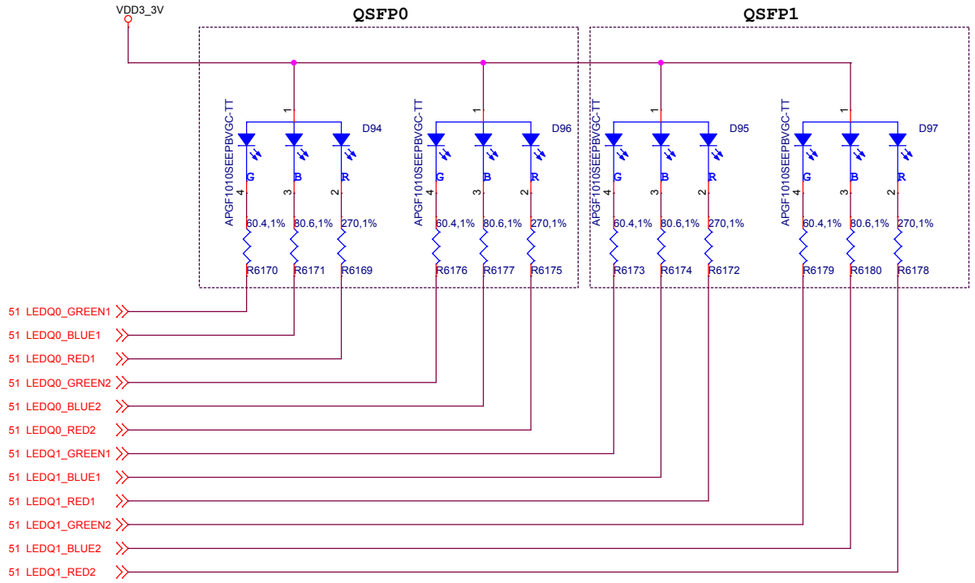

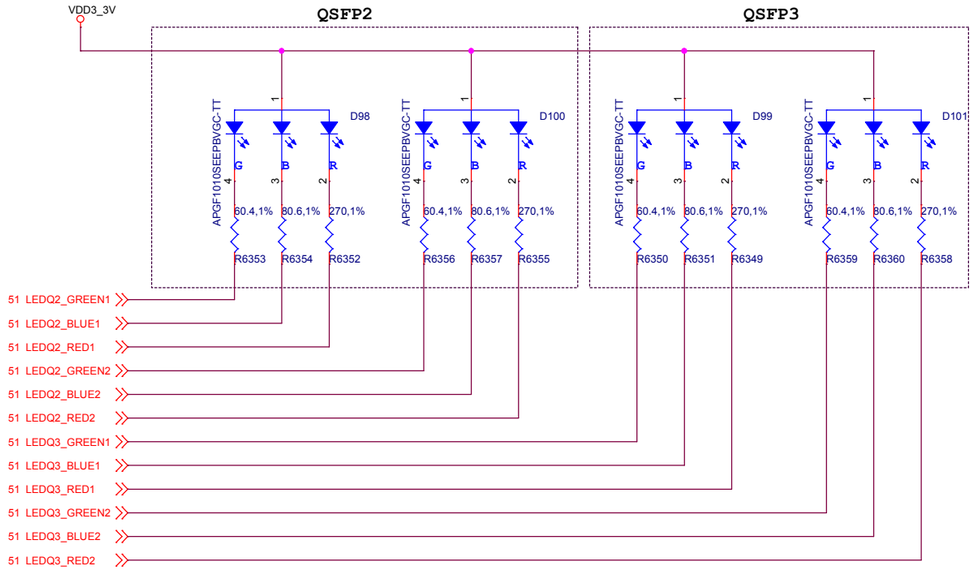

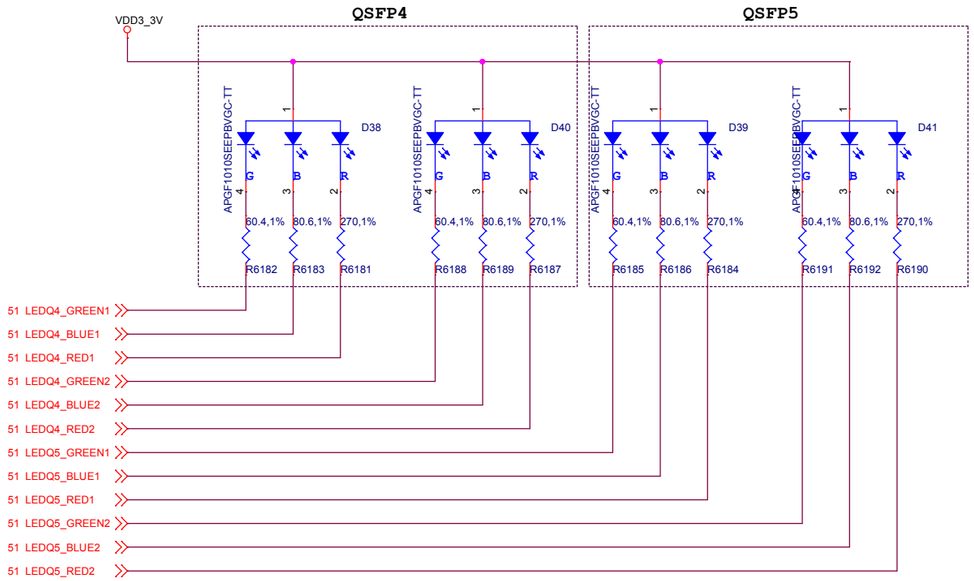

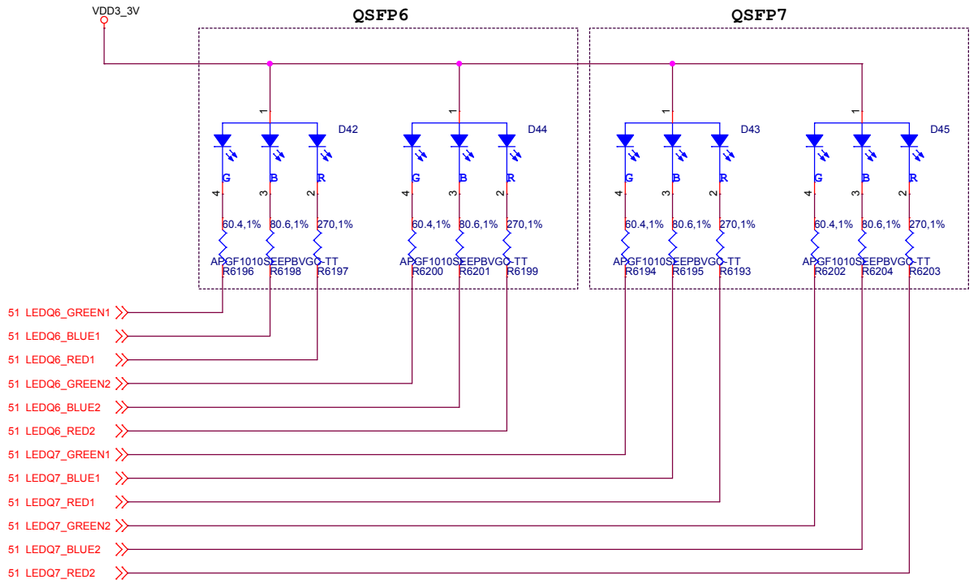

QSFP LEDS-1

CAVIUM

Title: WEDGE100C

Size	Document Number	Rev
C	80-00010-03	2.0

Date: Thursday, December 22, 2016 Sheet 46 of 84

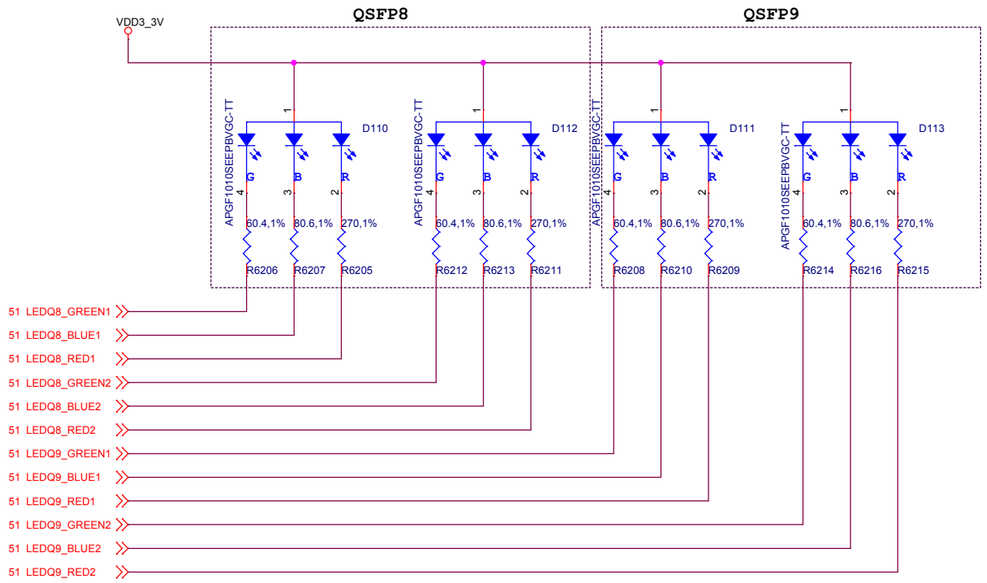

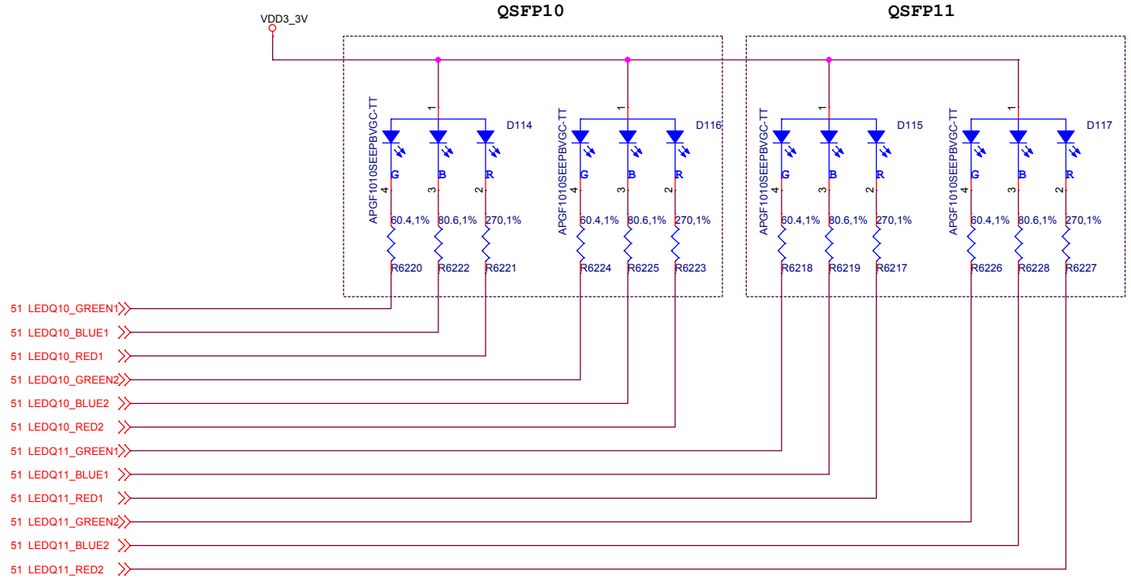

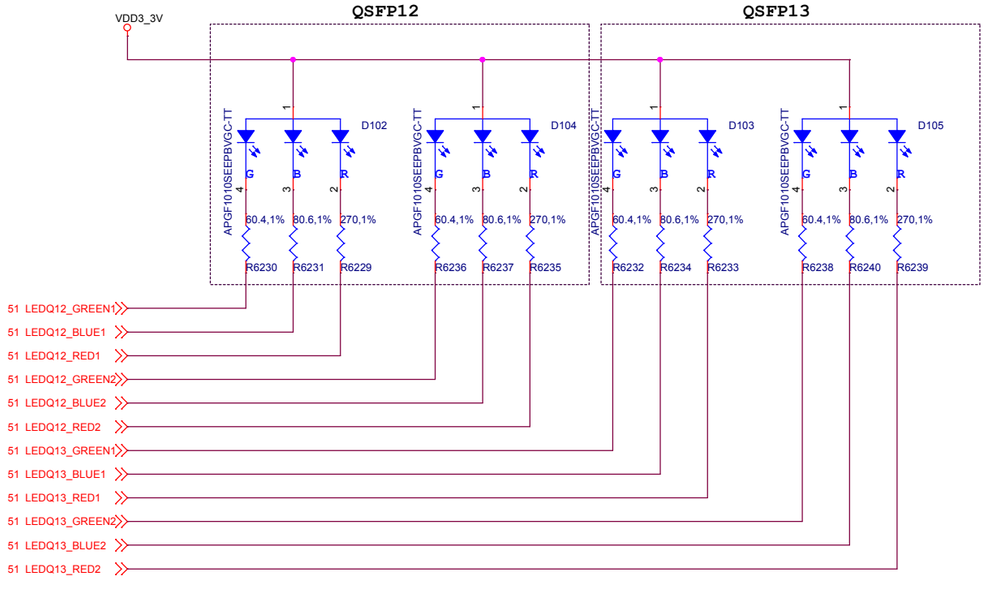

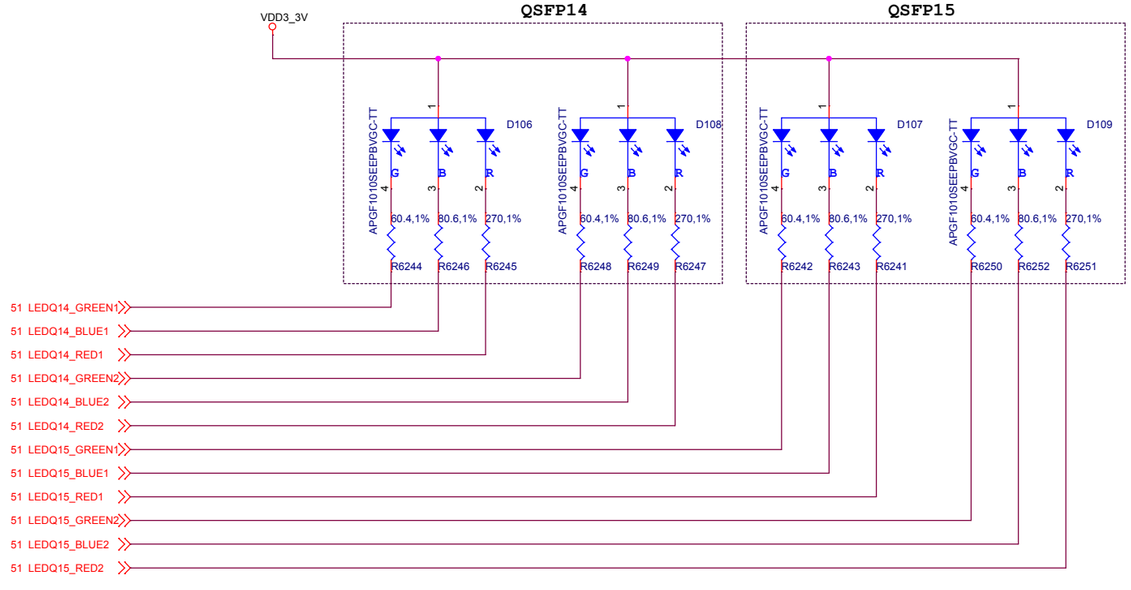

QSFP LEDS-2

CAVIUM

Title: WEDGE100C

Size	Document Number	Rev
C	80-00010-03	2.0

Date: Thursday, December 22, 2016 Sheet 47 of 84

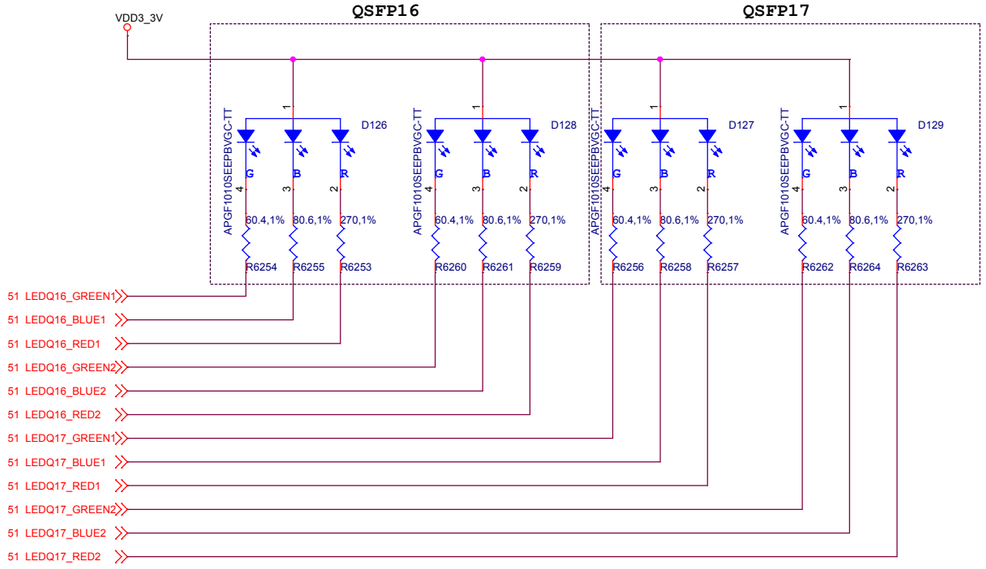

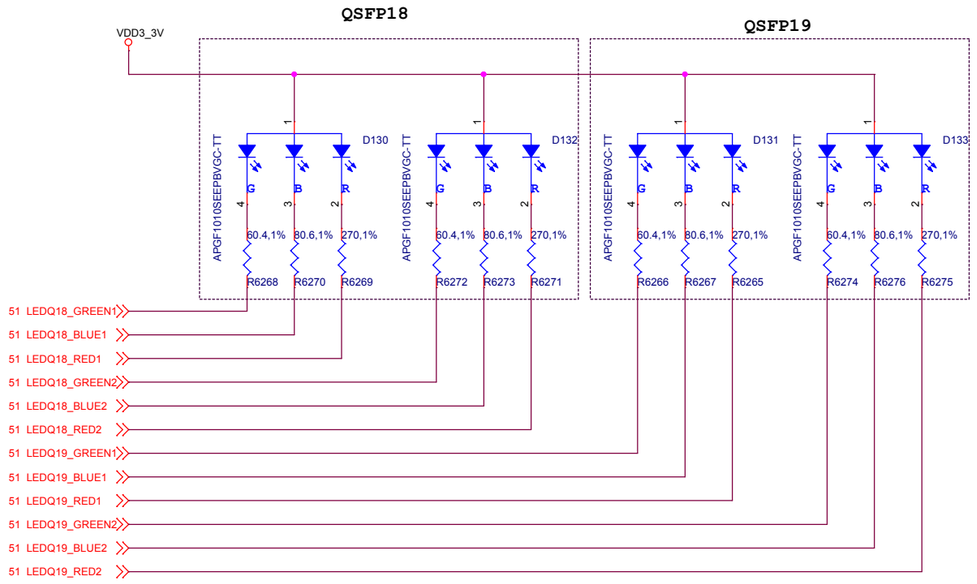

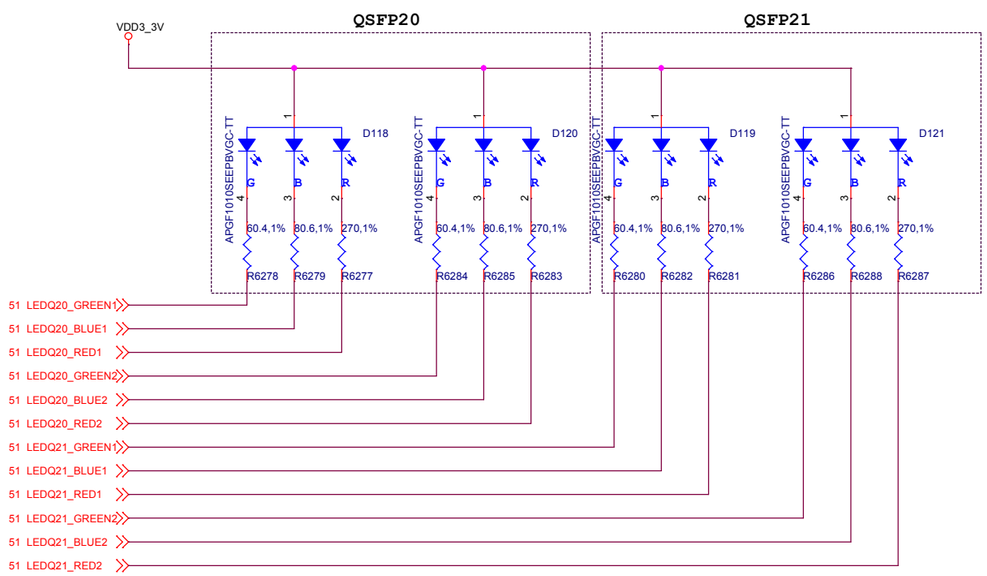

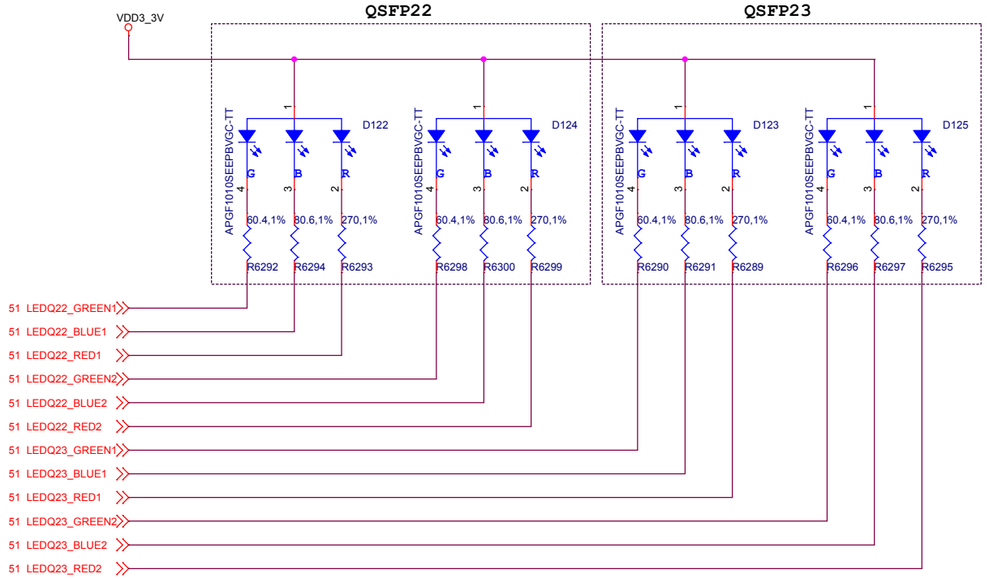

QSFP LEDS-3

CAVIUM

Title: WEDGE100C

Size	Document Number	Rev
C	80-00010-03	2.0

Date: Thursday, December 22, 2016 Sheet 48 of 84

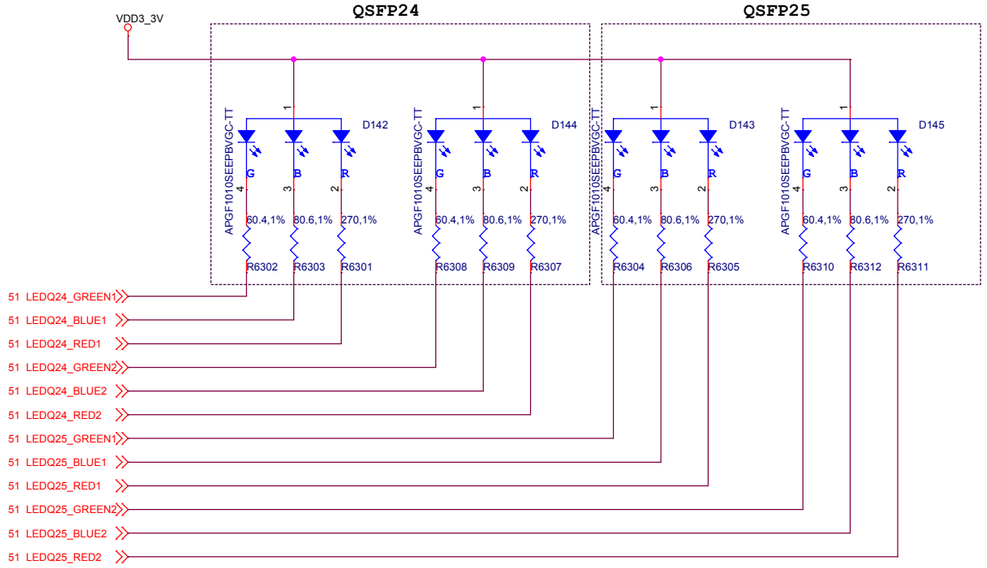

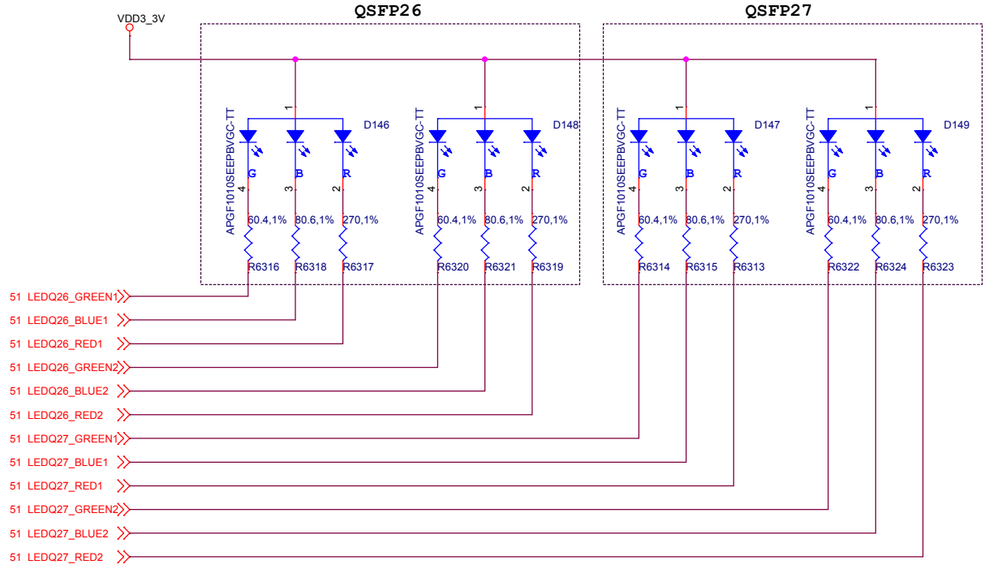

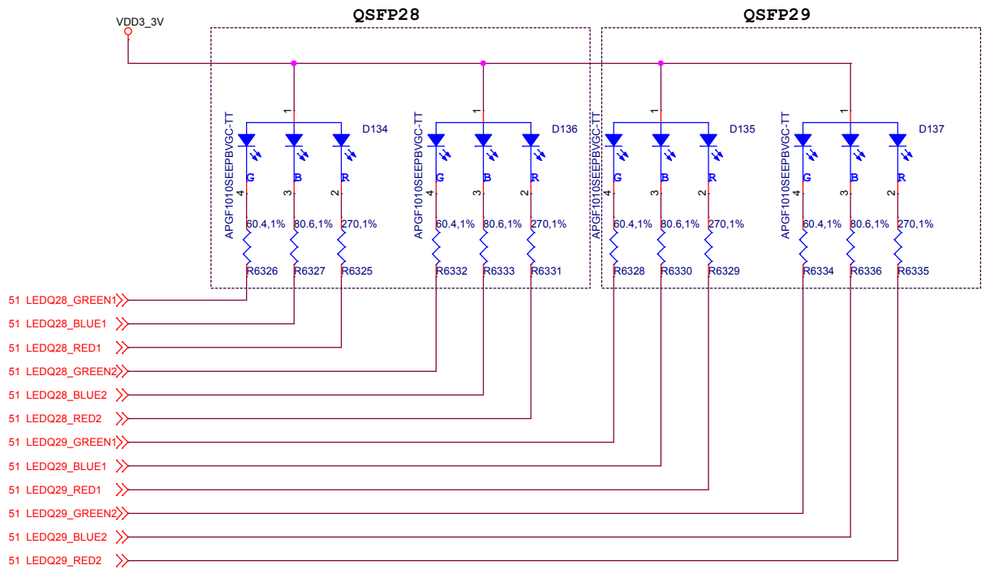

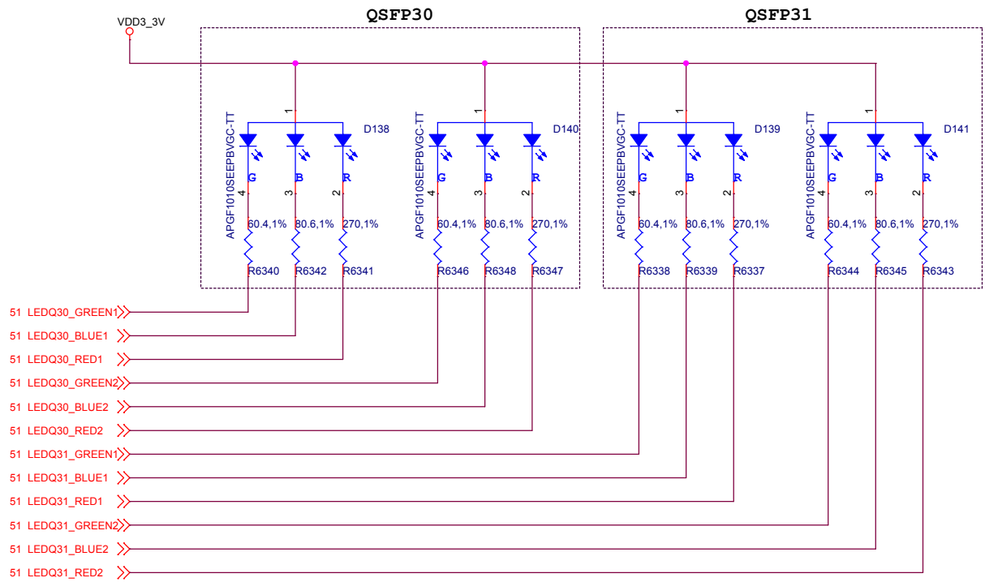

QSFP LEDS-4

CAVIUM		
Title: WEDGE100C		
Size: C	Document Number: 80-00010-03	Rev: 2.0
Date: Thursday, December 22, 2016	Sheet 49 of 84	

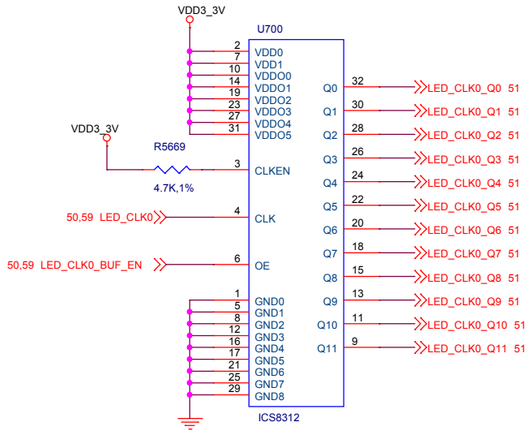

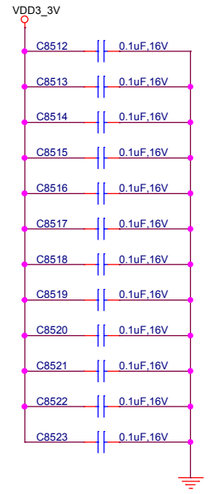

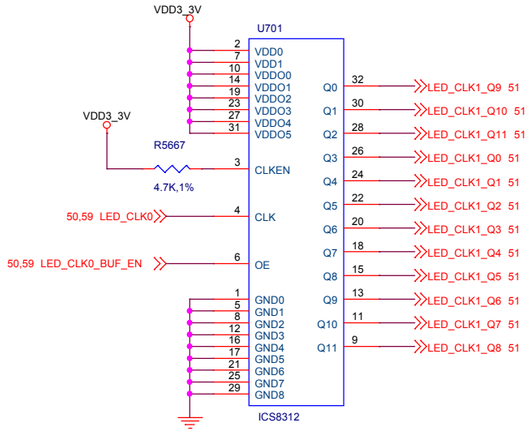

QSFP LED CLOCK FANOUT BUFFERS

CAVIUM		
Title: WEDGE100C		
Size: C	Document Number: 80-00010-03	Rev: 2.0
Date: Thursday, December 22, 2016	Sheet 50 of 84	

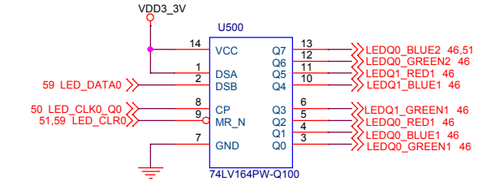

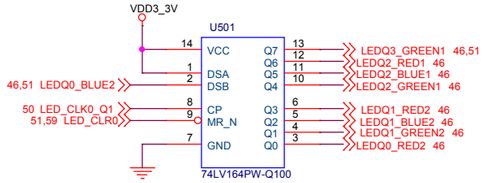

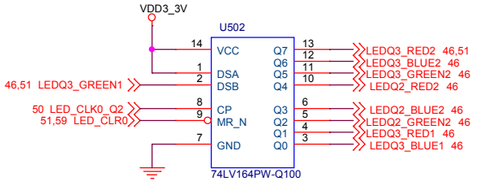

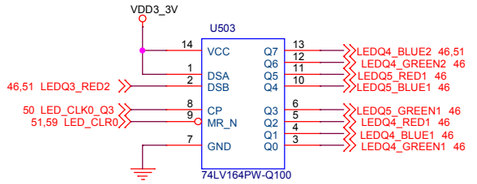

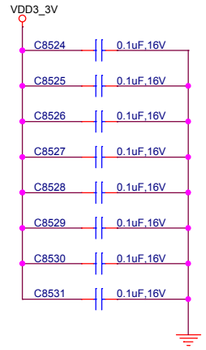

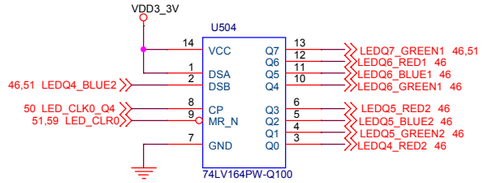

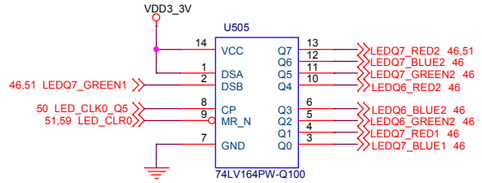

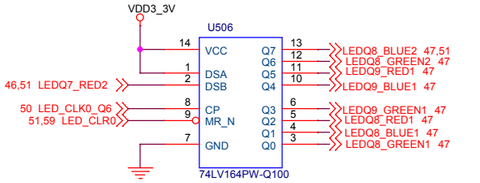

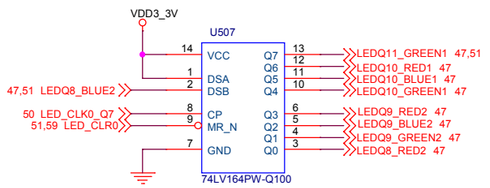

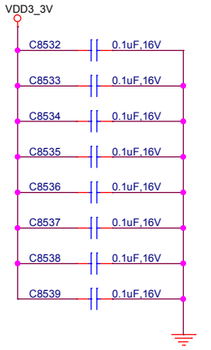

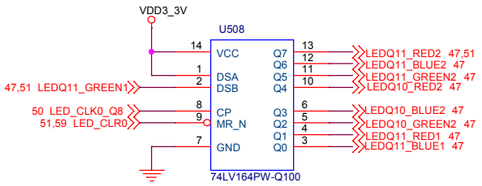

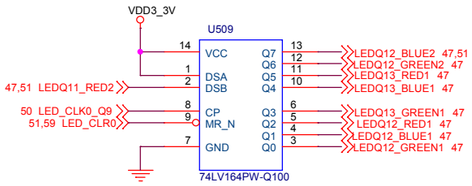

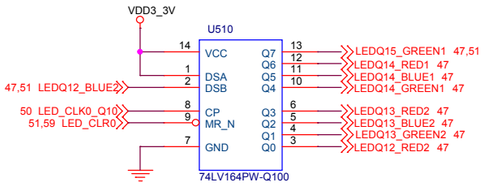

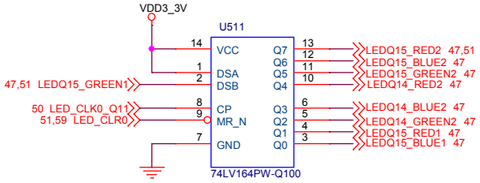

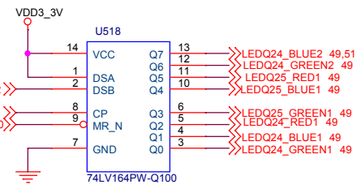

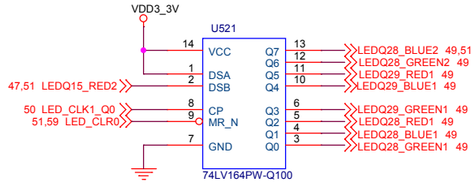

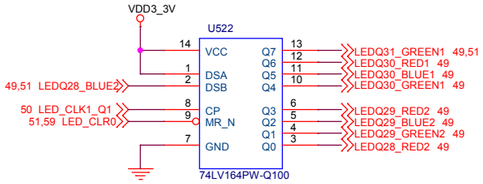

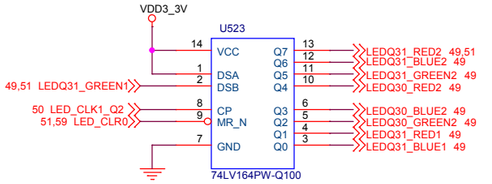

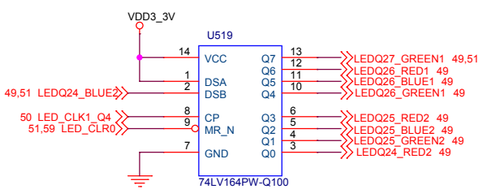

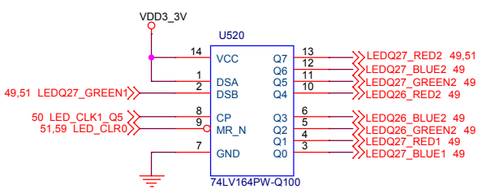

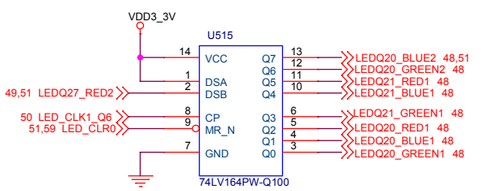

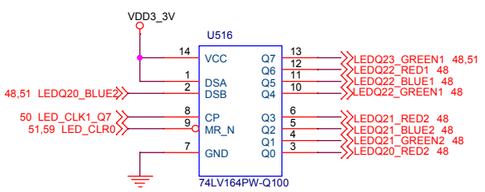

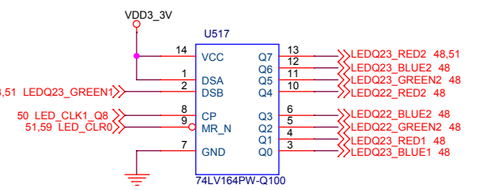

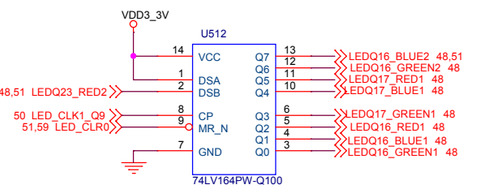

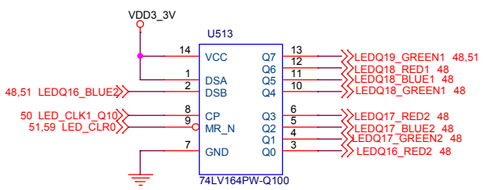

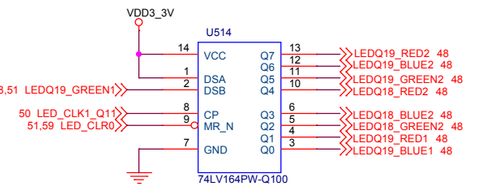

QSFP LED SHIFT REGISTERS

CAVIUM		
Title: WEDGE100C		
Size: C	Document Number: 80-00010-03	Rev: 2.0
Date: Thursday, December 22, 2016	Sheet 51 of 84	

PAGE INTENTIONALLY LEFT BLANK

PULLUP FOR I2C SIGNALS

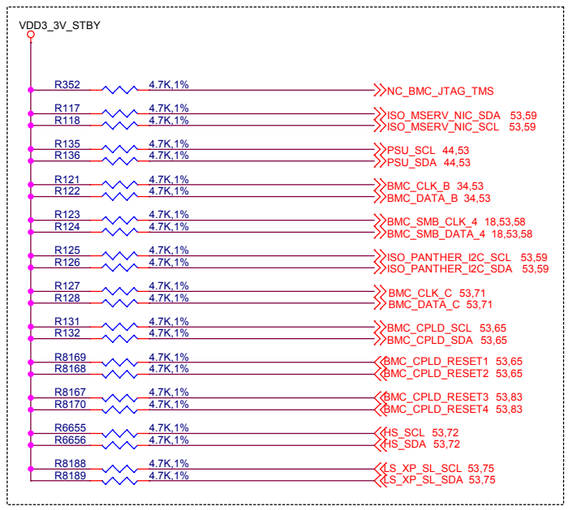

BMC HEART BEAT LED

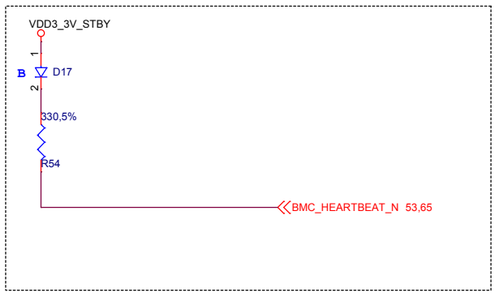

MVREF VOLTAGE DIVIDER

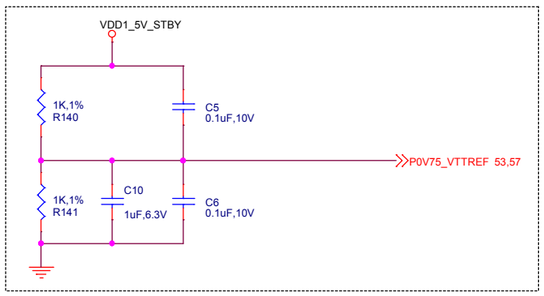

1.8V to 3.3V Level Shifter

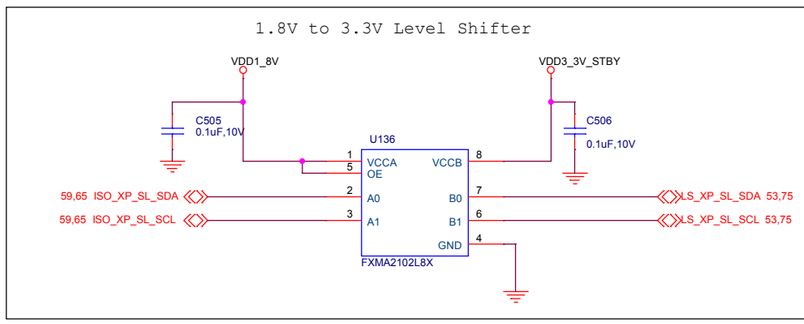

BMC- PAGE1

CAVIUM		
Title: WEDGE100C		
Size: C	Document Number: 80-00010-03	Rev: 2.0
Date: Thursday, December 22, 2016	Sheet 53 of 84	

RACKPORT BITS ARE DELETED BECAUSE THESE FUNCTIONS ARE MOVED TO RACKMON CONNECTOR

PREVIOUSLY ALL 12V INFORMATION WERE COLLECTED FROM HOT SWAP ,NOW ITS THROUGH I2C

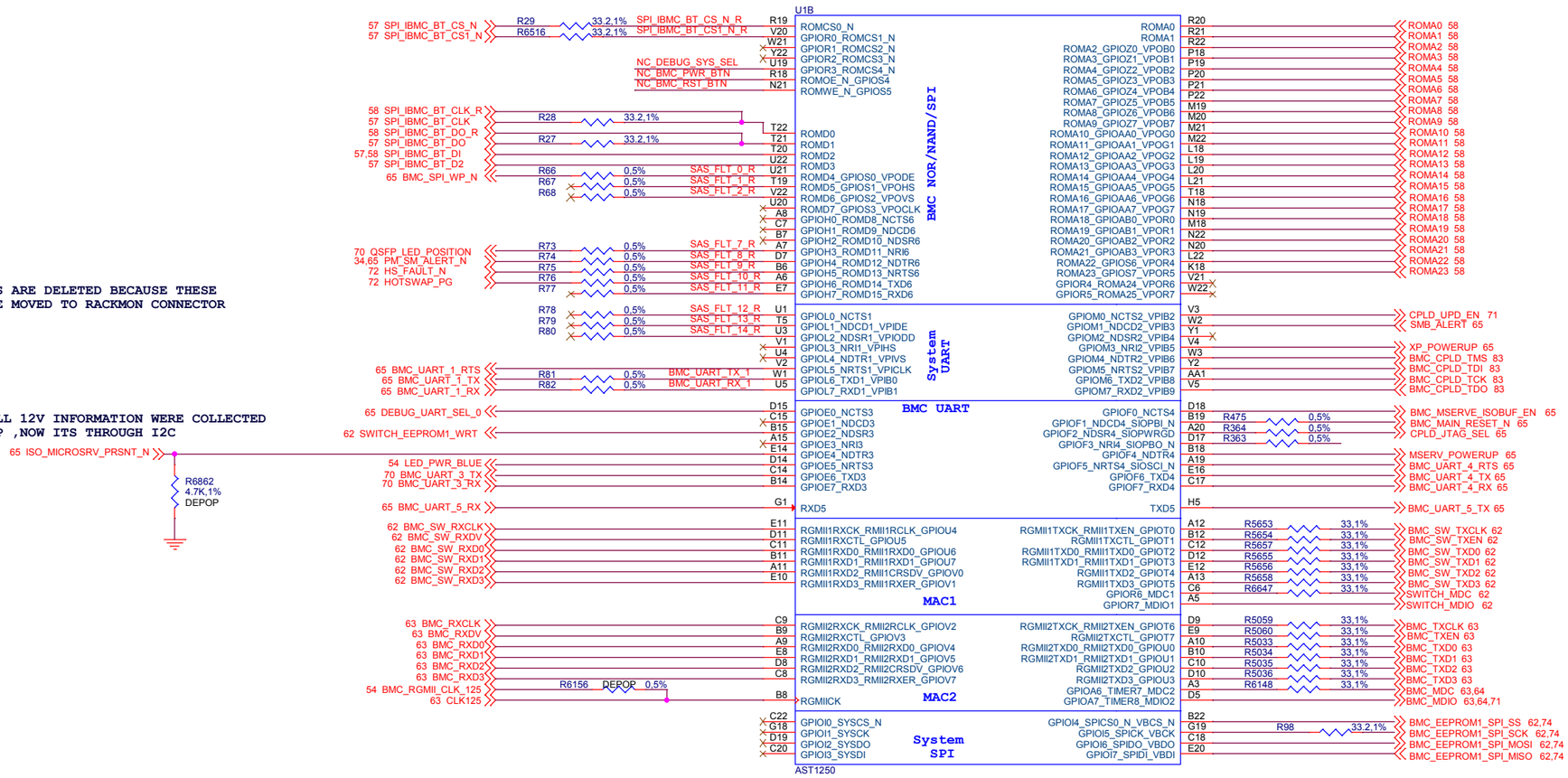

SPARE 125Mhz CLOCK FOR MAC2 RGMII

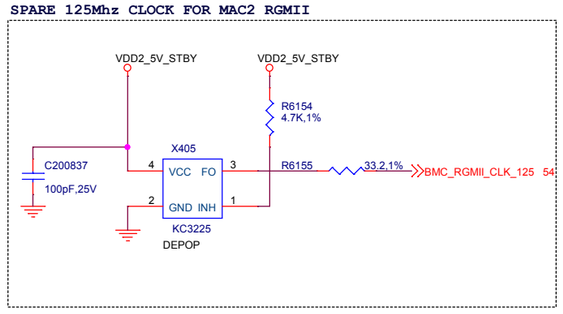

SPARE PULLUP

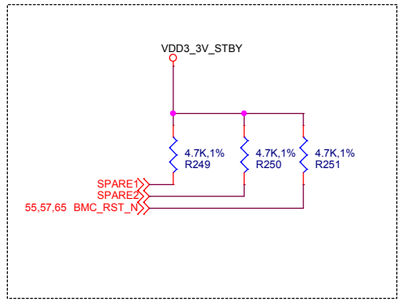

POWER BLUE LED

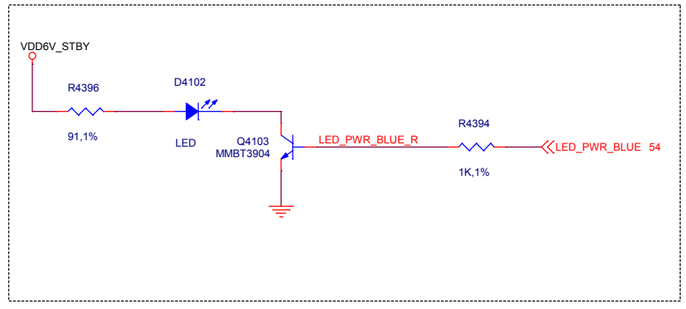

BMC- PAGE2

CAVIUM

Title: WEDGE100C

Size	Document Number	Rev
C	80-00010-03	2.0

Date: Thursday, December 22, 2016 Sheet 54 of 84

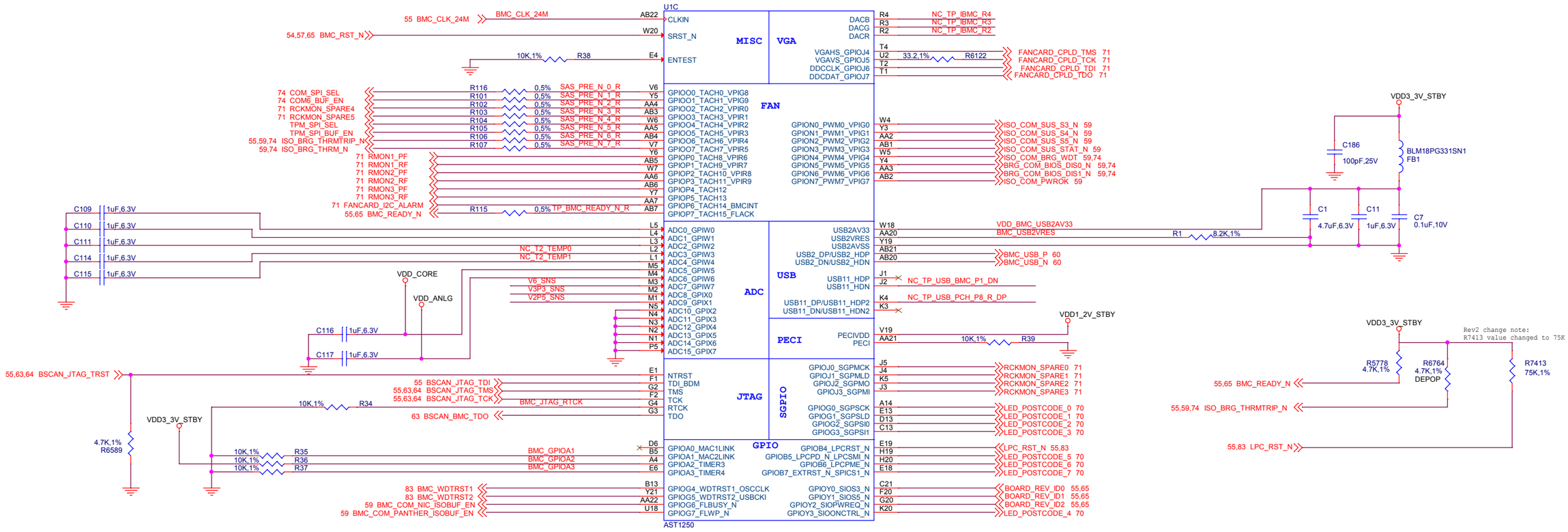

JTAG BOUNDARY SCAN HEADER

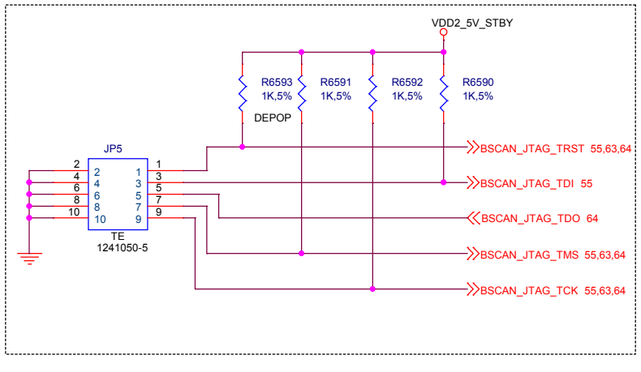

BOARD REV ID

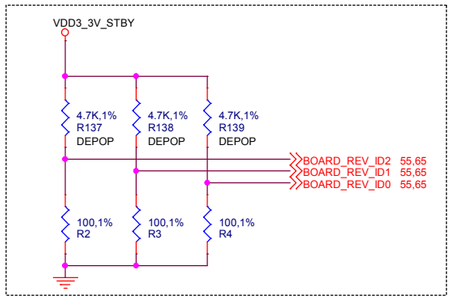

VOLTAGE DIVIDER FOR BMC ADC VOLTAGE SENSORS

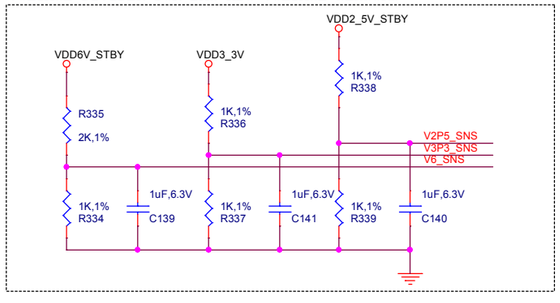

BMC CLK 24Mhz

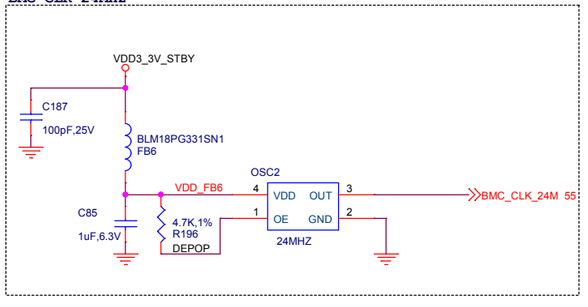

BMC- PAGE3

CAVIUM		
Title: WEDGE100C		
Size: C	Document Number: 80-00010-03	Rev: 2.0
Date: Thursday, December 22, 2016	Sheet 55 of 84	

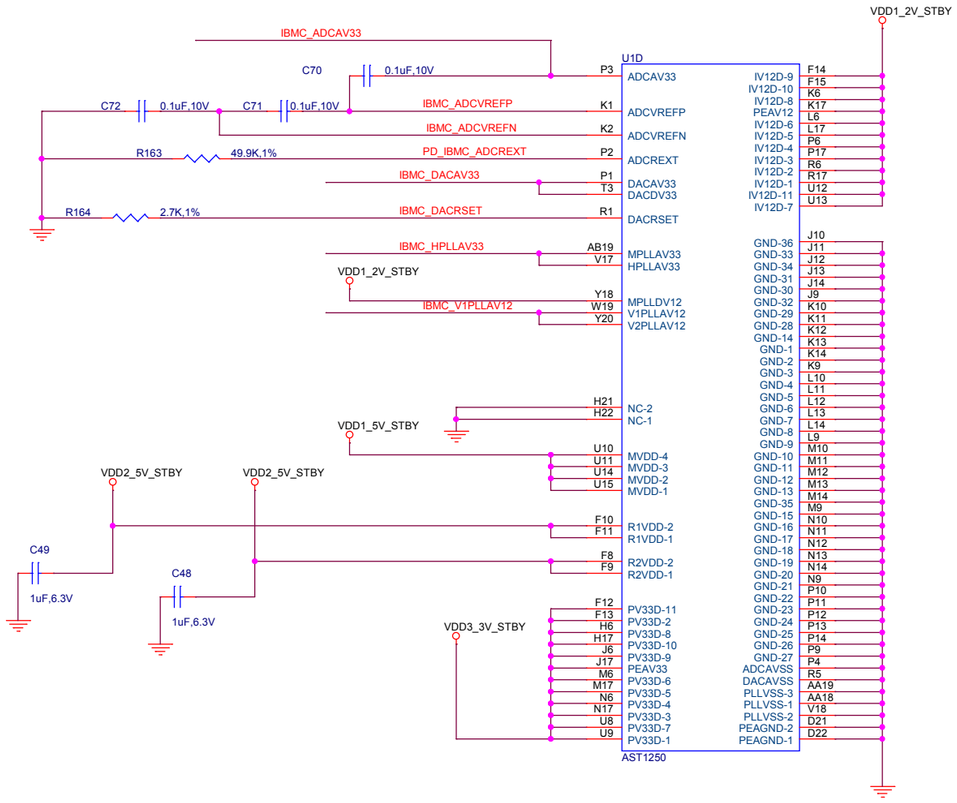

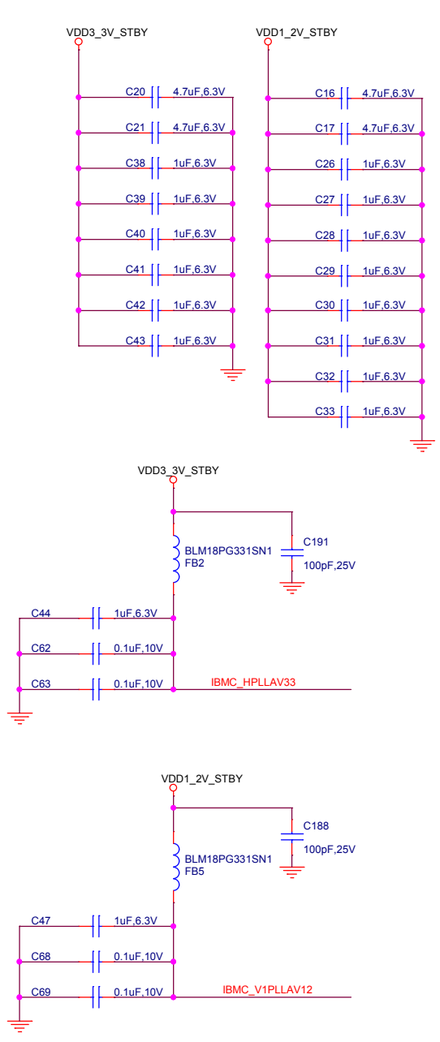

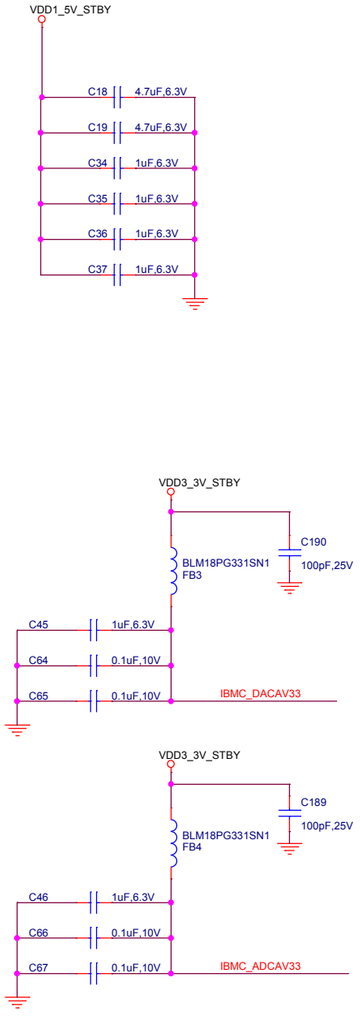

BMC- PAGE4

CAVIUM		
Title: WEDGE100C		
Size: C	Document Number: 80-00010-03	Rev: 2.0
Date: Thursday, December 22, 2016	Sheet 56 of 84	

SPI BOOT FLASH

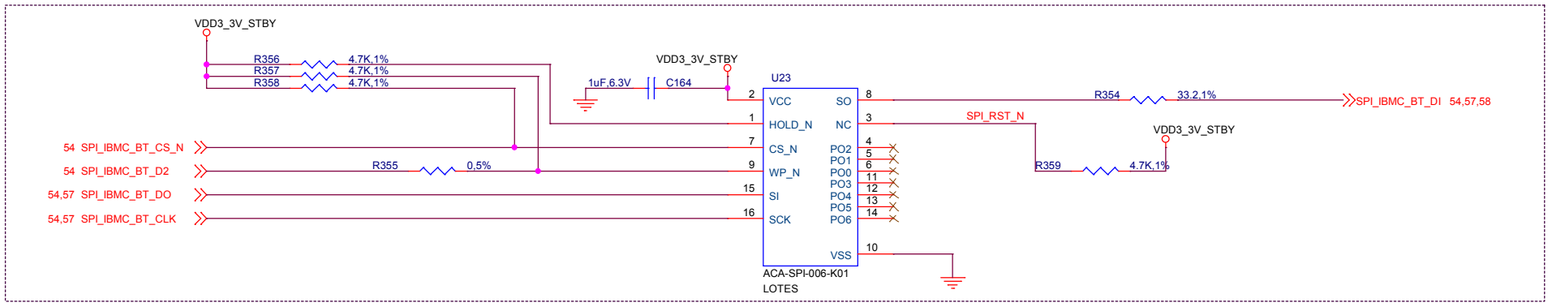

U223

MX25L25735F

NOTE : FLASH IS SOCKETED
FLASH : MX25L25735F

SECONDARY SPI BOOT FLASH

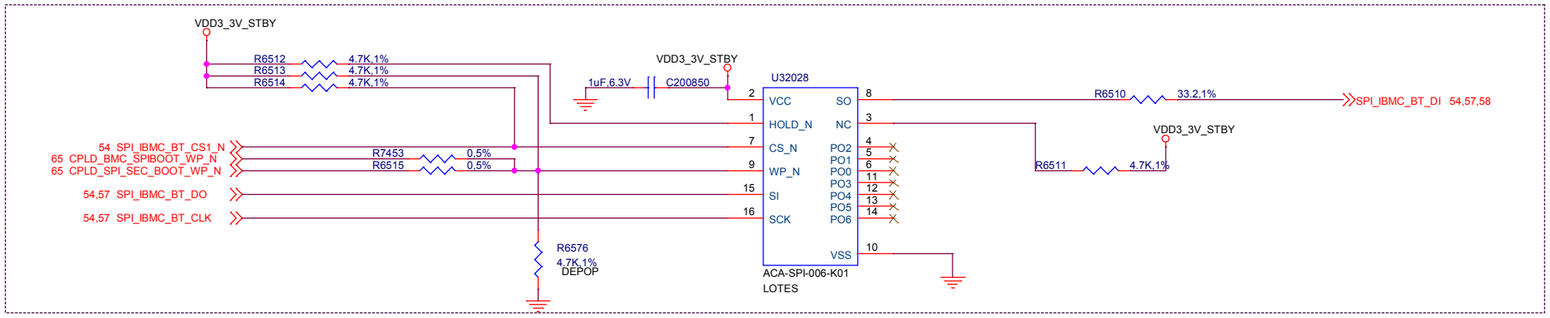

U224

MX25L25735F

NOTE : FLASH IS SOCKETED
FLASH : MX25L25735F

BMC DDR3

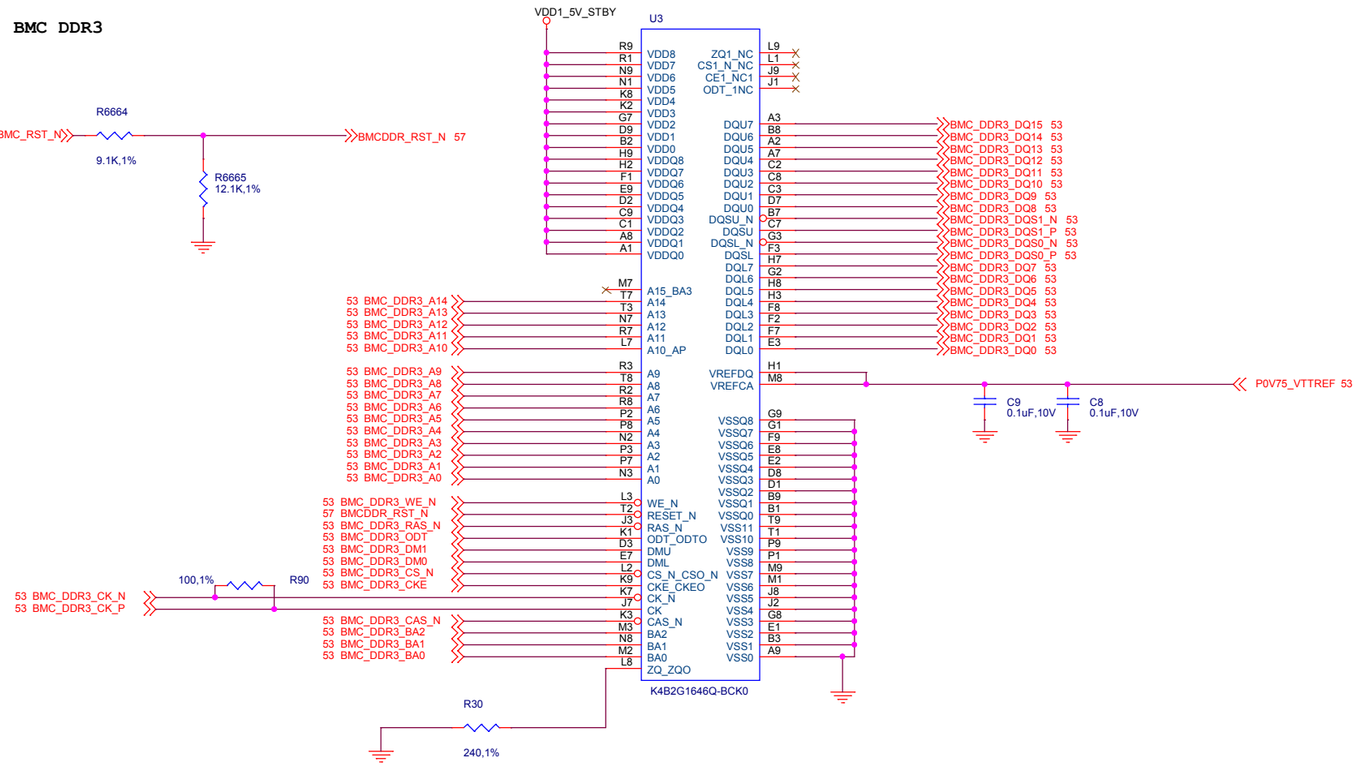

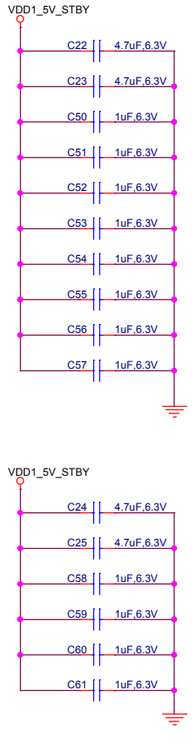

BMC DDR

CAVIUM		
Title: WEDGE100C		
Size: C	Document Number: 80-00010-03	Rev: 2.0
Date: Thursday, December 22, 2016	Sheet 57 of 84	

BMC STRAPPING

ROMA [1:0] = 10: Boot from SPI flash memory

ROMA [3:2] = 00: Select 8mb VGA memory
ROMA 4 = 1:select 16bit interface for NOR type flash
ROMA 5= 0:No VGA BIOS ROM for on-board applications
ROMA 6 = 1: MAC1 interface configured to RGMII
ROMA 7 = 1: MAC2 interface configured to RGMII

ROMA [9:8] = 01: H-PLL clock frequency 360Mhz

ROMA [11:10] = 01:CPU/AHB clock frequency ratio =2:1

ROMA [13:12] = 00:disable SPI interface
ROMA 14= 1:LPC reset is not shared with PCI reset
ROMA 15 = 0:select the class code for video device
ROMA 16 = 0:superIO configuration address selection(decode0x2E)
ROMA 17 = 0:Disable BMC 2nd boot watch dog timer
= 1:Enable BMC 2nd boot watch dog timer
ROMA [23:18] = 00: 24 mhz feed clkin
ROMA 19 = 1:Disable ACPI function
ROMA 20 = 0:Enable LPC to decode superIO 0x2E/0x4E address
ROMA 21 = 0:Disable GPIOD pass through mode
ROMA 22 = 0:Disable GPIOE pass through mode

NOTE: FOR ROMA 17 CPLD will make it high or low to enable or disable Dual BOOT option

TEMP SENSORS

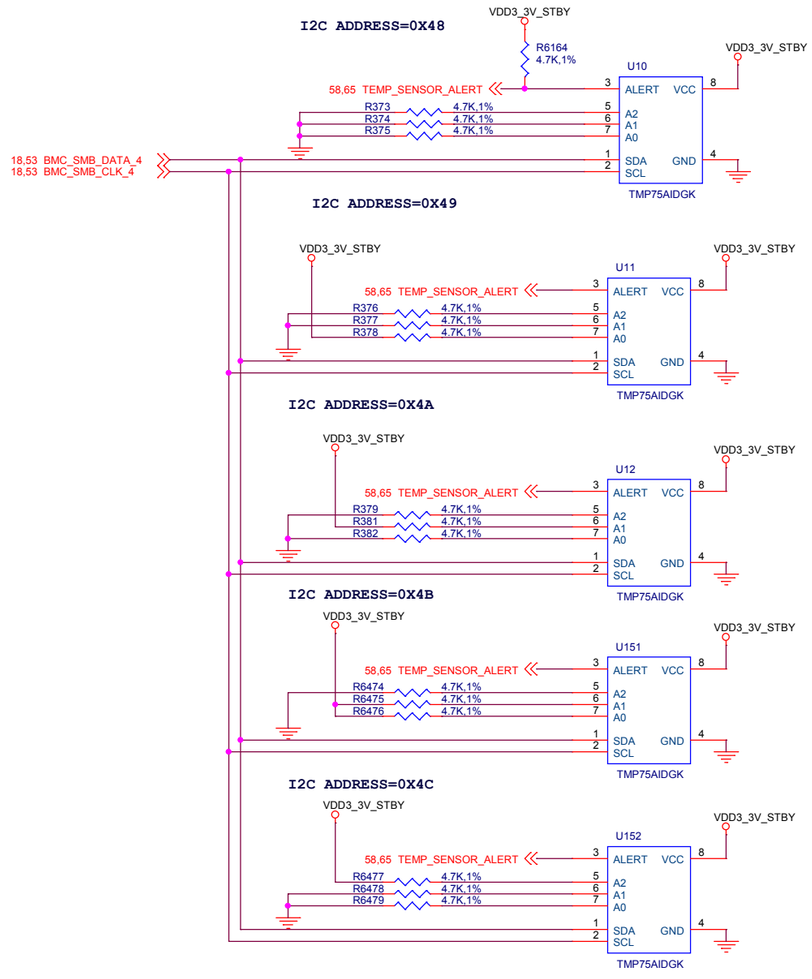

BMC STRAPPING &TEMP SENSOR

CAVIUM		
Title: WEDGE100C		
Size: C	Document Number: 80-00010-03	Rev: 2.0
Date: Thursday, December 22, 2016	Sheet 58 of 84	

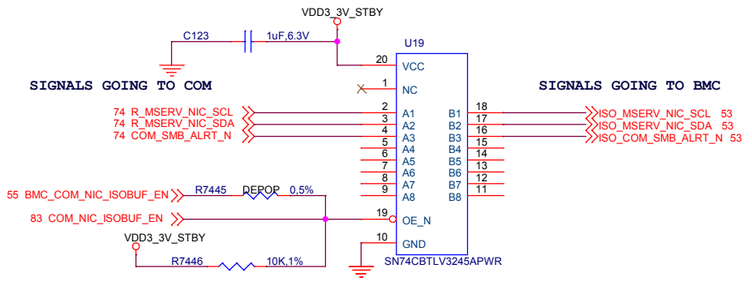

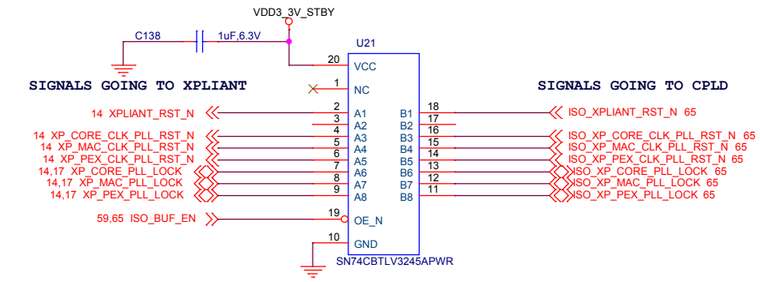

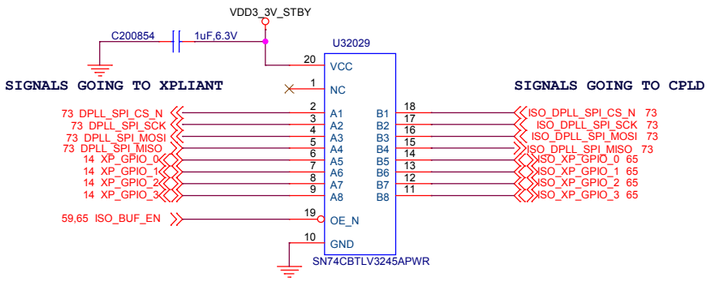

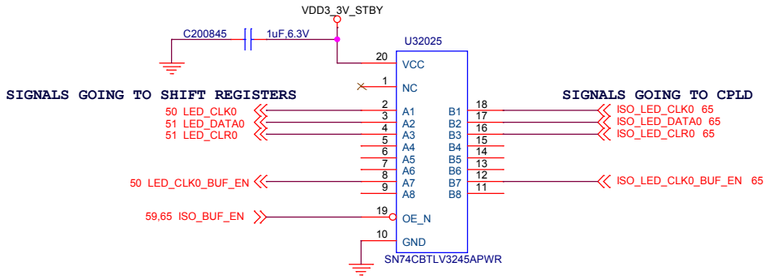

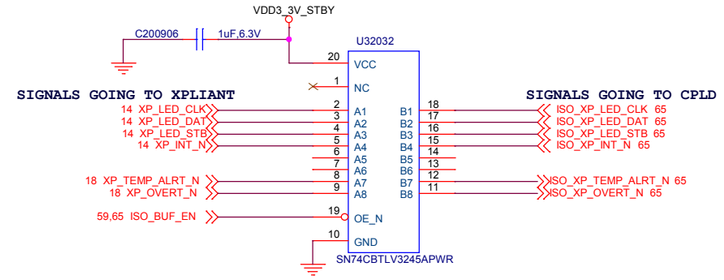

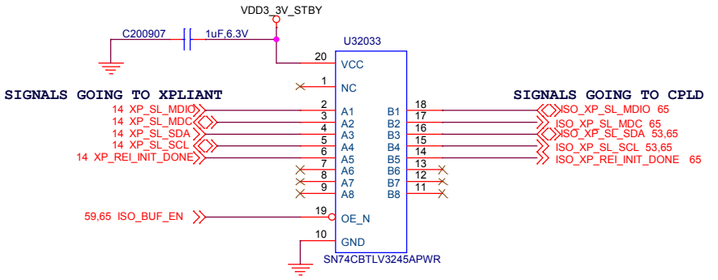

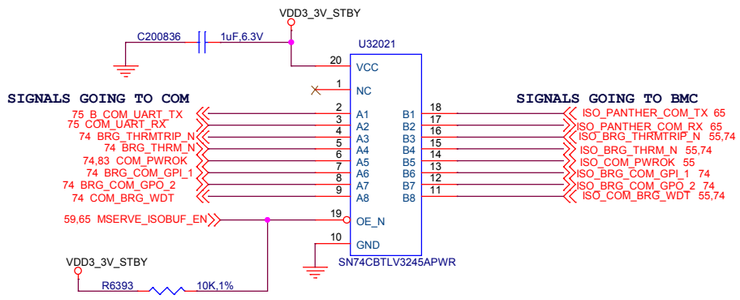

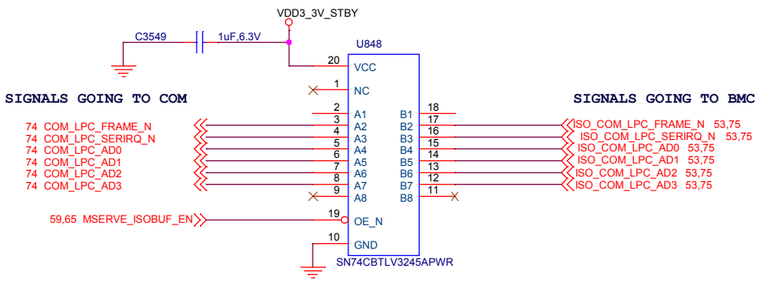

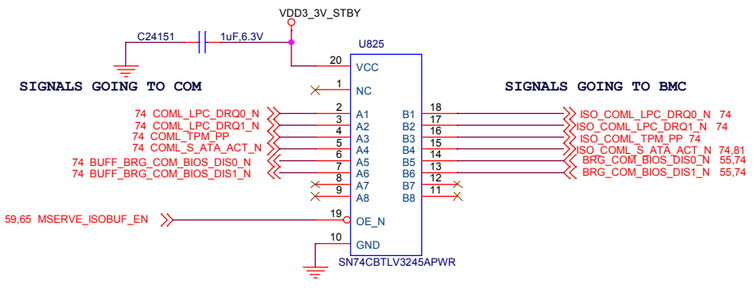

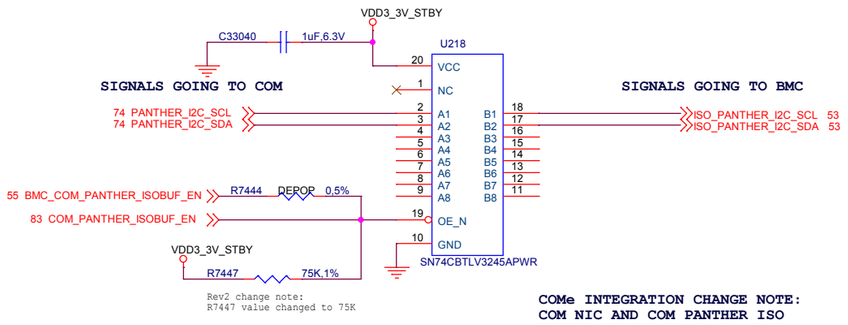

COMe INTEGRATION CHANGE NOTE:
COM NIC AND COM PANTHER ISO
BUFFER ENABLE ADDED TO CPLD

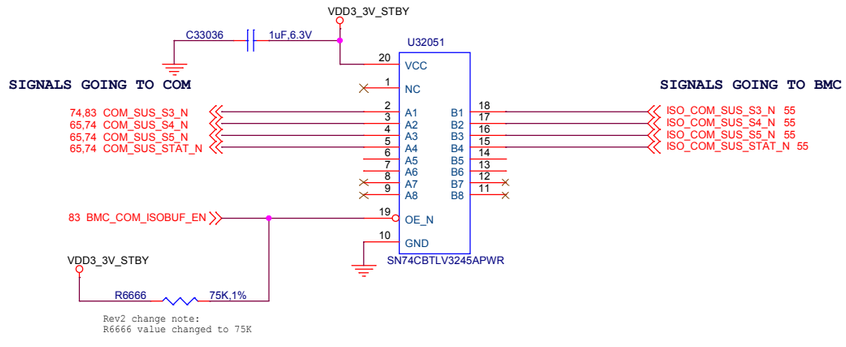

SIGNAL ISOLATION BUFFERS

CAVIUM		
Title: WEDGE100C		
Size: C	Document Number: 80-00010-03	Rev: 2.0
Date: Thursday, December 22, 2016	Sheet 59 of 84	

NOTE:FOR EVTA THE USB HUB USED IS 3PORT (USB2513B-AEZG) ;WHEN WE ARE IMPLEMENTING DPLL MODULE USB HUB WILL BE CHANGED TO 4 PORT PART(USB2514)

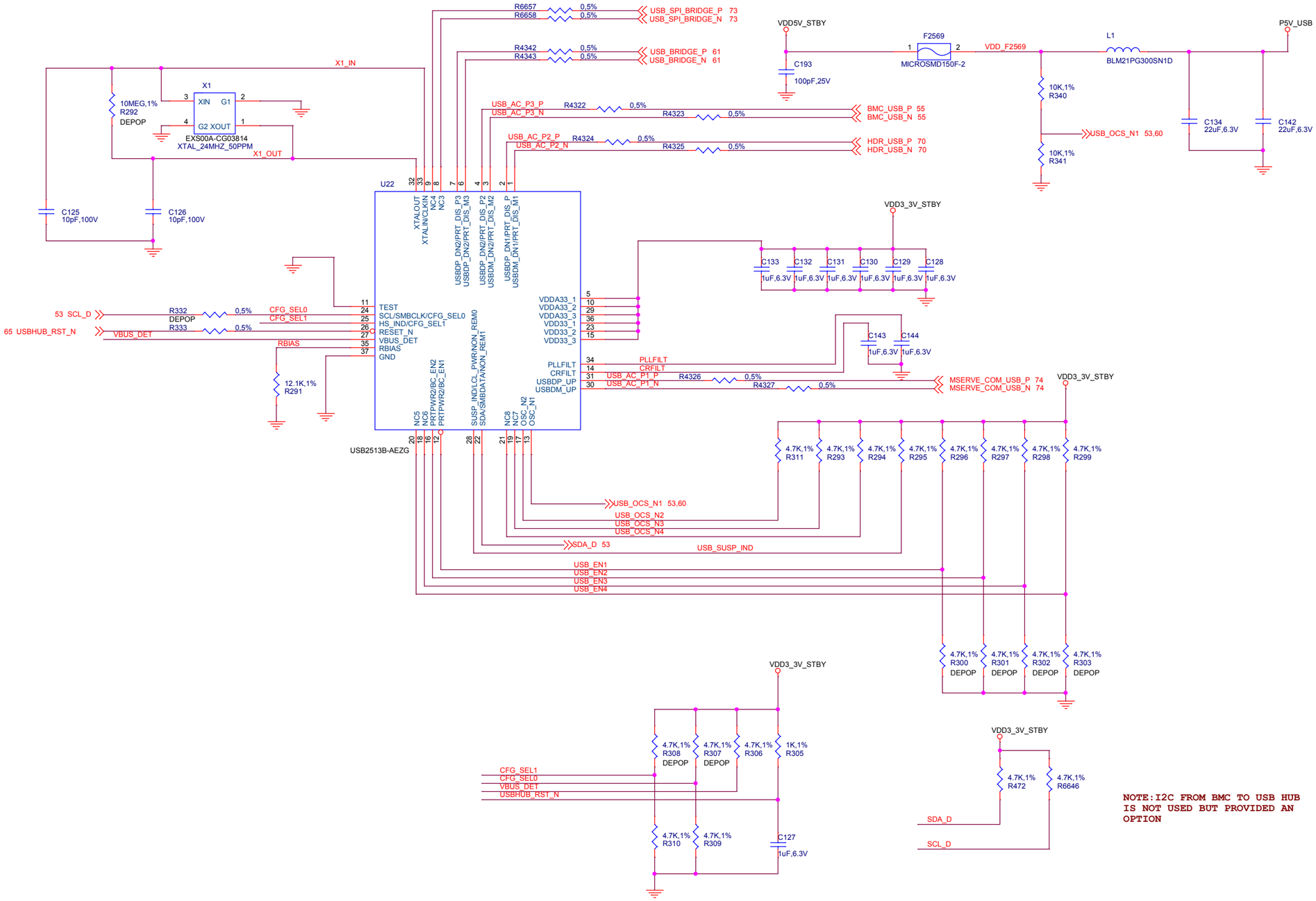

NOTE:I2C FROM BMC TO USB HUB IS NOT USED BUT PROVIDED AN OPTION

USB HUB

CAVIUM

Title: WEDGE100C

Size	Document Number	Rev
C	80-00010-03	2.0

Date: Thursday, December 22, 2016 Sheet 60 of 84

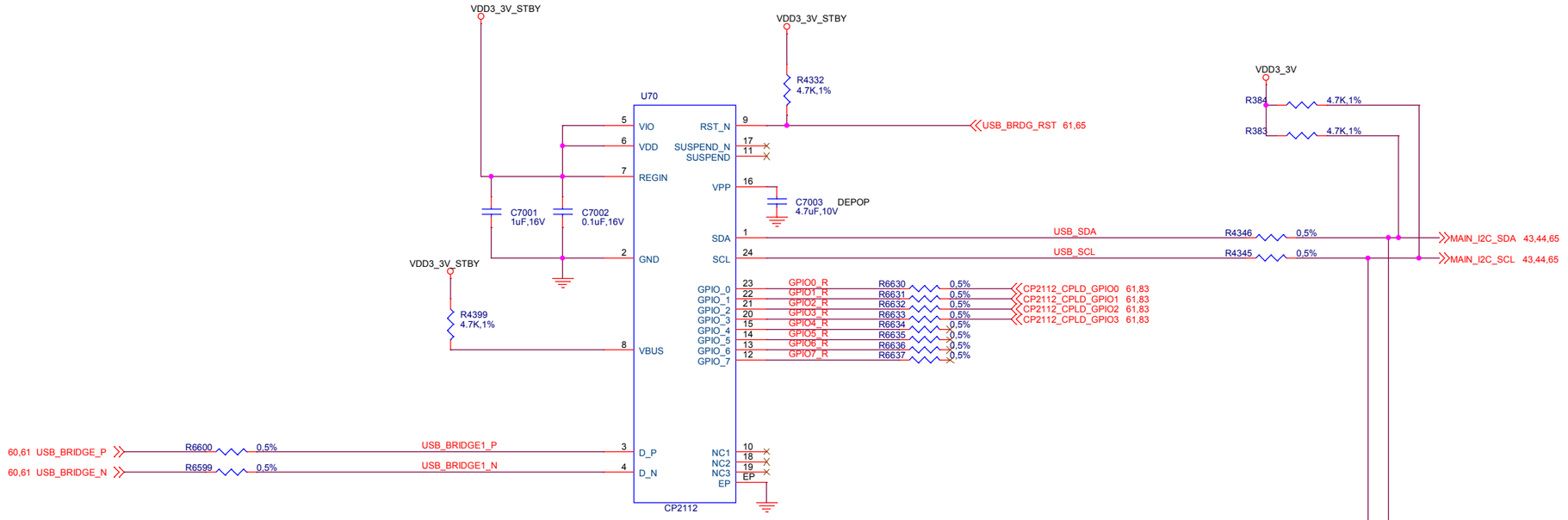

NOTE: THIS CKT IS AN ALTERNATIVE FOR CP2112

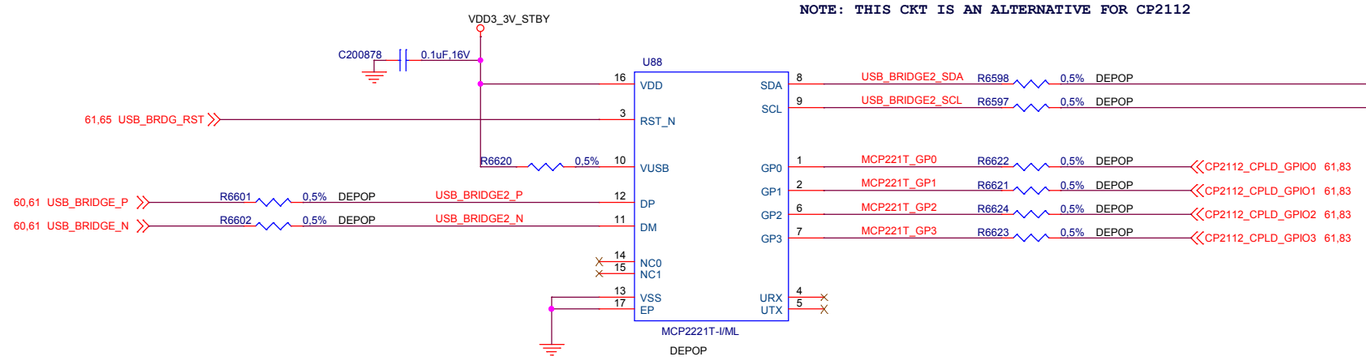

USB I2C BRIDGE

CAVIUM		
Title: WEDGE100C		
Size: C	Document Number: 80-00010-03	Rev: 2.0
Date: Thursday, December 22, 2016	Sheet 61 of 84	

L= BLM18AG601SN1(FB,600ohms ,PKG: 0603,200MA,DCR:500mOHM,SMD)

HARDWARE STRAPPING TABLE		
PINS	STRAPPING VALUE	DESCRIPTION
MODE[1,0]	00	RGMII MODE
QOS_EN	0	DISABLE QOS FUNCTION
QOS_FC_OFF	1	DISABLE FLOW CONTROL
HW_FWDG_EN	1	FRAME FORWARDING ENABLED
CPU_EPROM_SEL	0	EEPROM INTERFACE ENABLED
CLK_FREQ[1:0]	10	113MHz NORMAL OPERATION
EEPROM_EXT[1:0]	00	Supports 93C46 EEPROM
AUTO_POLL	1	EXTERNAL PHY POLLING DISABLED
BC_SUPP_EN	0	RATE BASED BROADCAST SUPPRESSION DISABLED

SWITCH EEPROM

org pin pulled high to select x16 mode

GE SWITCH

CAVIUM		
Title: WEDGE100C		
Size: D	Document Number: 80-00010-03	Rev: 2.0
Date: Thursday, December 22, 2016	Sheet 62 of 84	

L= BLM18EG221SN1D(FB, 220OHM,2A,DCR:50mOHMS,PKG: 0603,SMD)

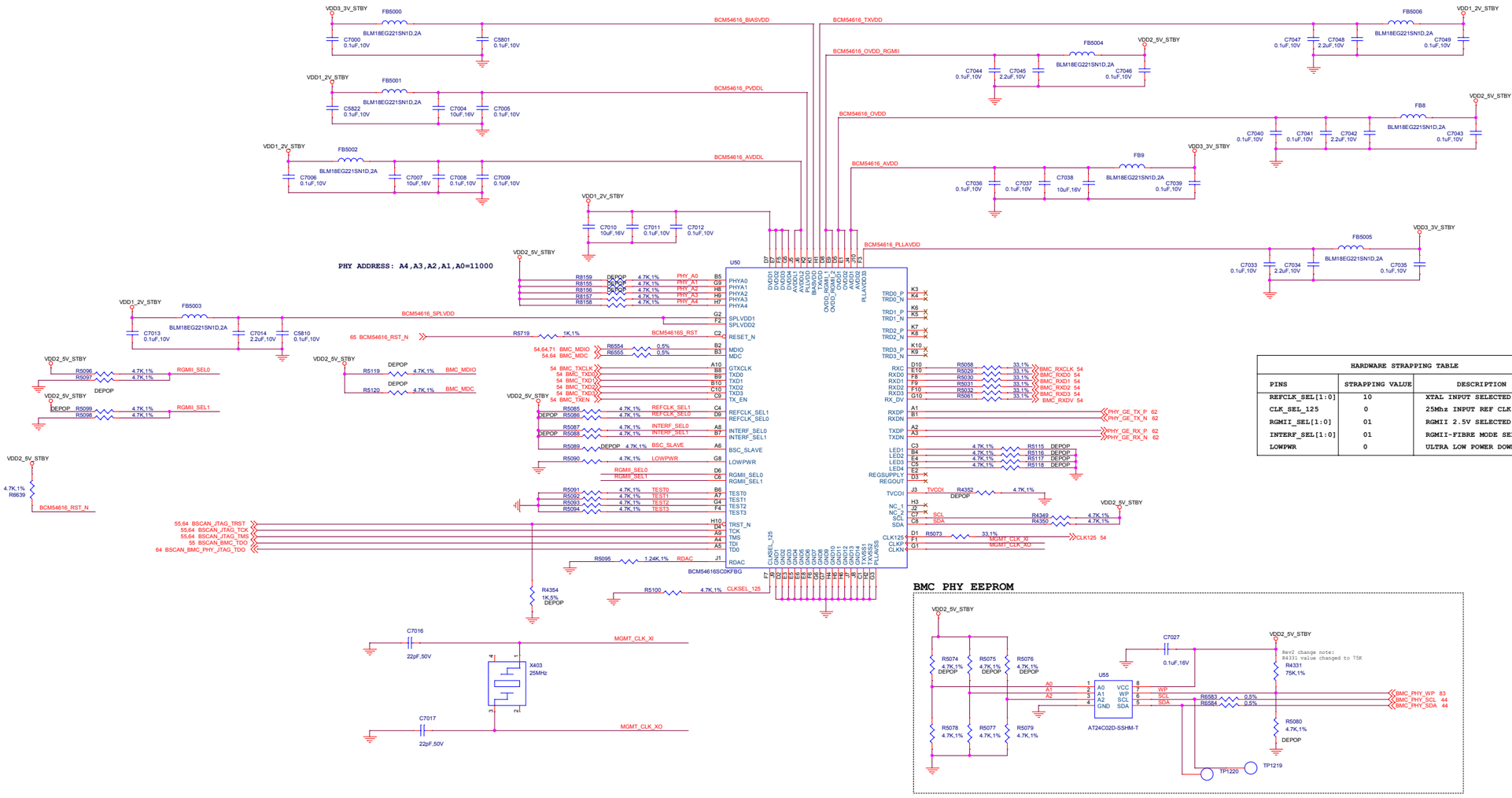

HARDWARE STRAPPING TABLE		
PINS	STRAPPING VALUE	DESCRIPTION
REFCLK_SEL[1:0]	10	XTAL INPUT SELECTED
CLK_SEL_125	0	25Mhz INPUT REF CLK ON CLK PINS
RGMII_SEL[1:0]	01	RGMII 2.5V SELECTED
INTERF_SEL[1:0]	01	RGMII-FIBRE MODE SELECTED
LOWPWR	0	ULTRA LOW POWER DOWN MODE DISABLED

BMC PHY EEPROM

BMC PHY

CAVIUM

File: WEDGE100C

Size: D | Document Number: 80-00010-03 | Rev: 2.0

Date: Thursday, December 22, 2016 | Sheet 63 of 84

L= BLM18EG221SN1D(FB, 2200HM,2A,DCR:50mOHMS,PKG: 0603,SMD)

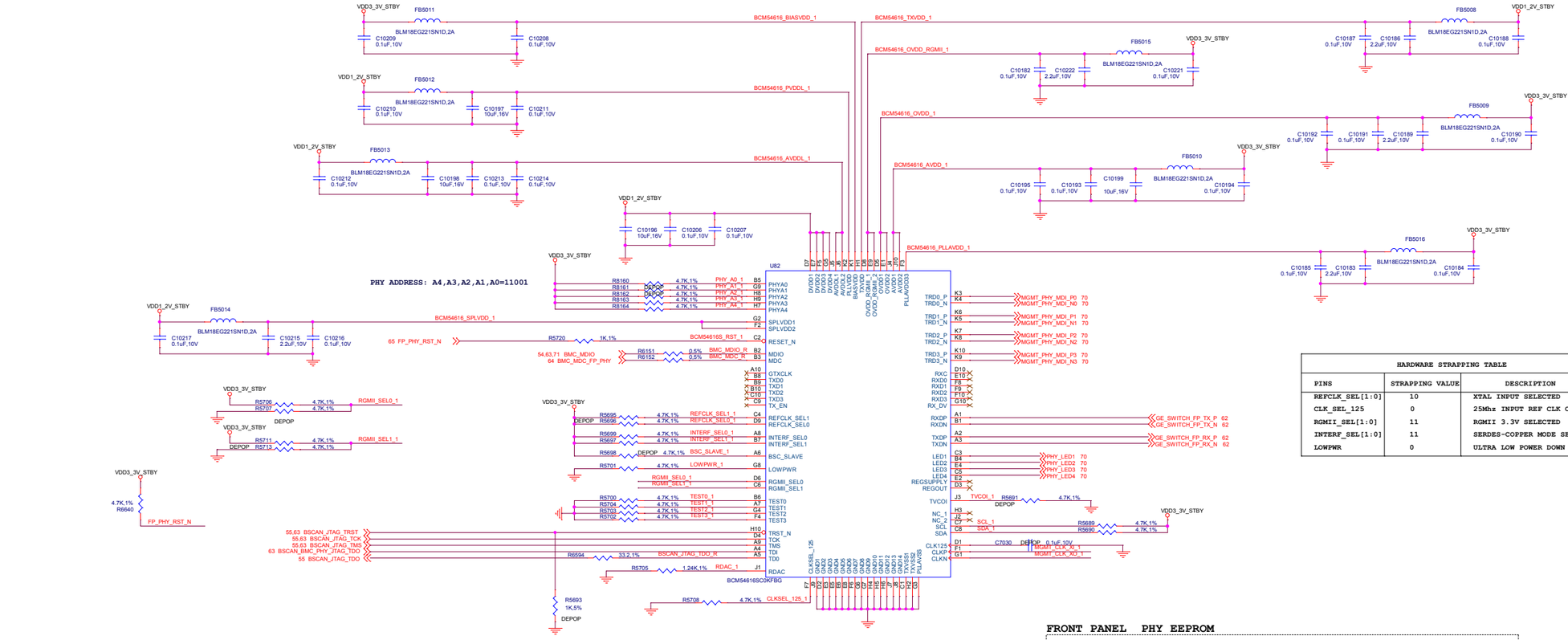

HARDWARE STRAPPING TABLE		
PINS	STRAPPING VALUE	DESCRIPTION
REFCLK_SEL[1:0]	10	XTAL INPUT SELECTED
CLK_SEL_125	0	25Mhz INPUT REF CLK ON CLK PINS
RGMII_SEL[1:0]	11	RGMII 3.3V SELECTED
INTERF_SEL[1:0]	11	SERDES-COPPER MODE SELECTED
LOWPWR	0	ULTRA LOW POWER DOWN MODE DISABLED

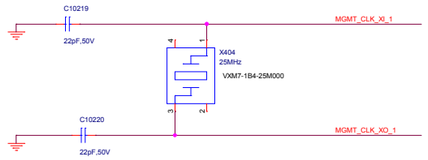

BMC MDC FAN OUT BUFFER

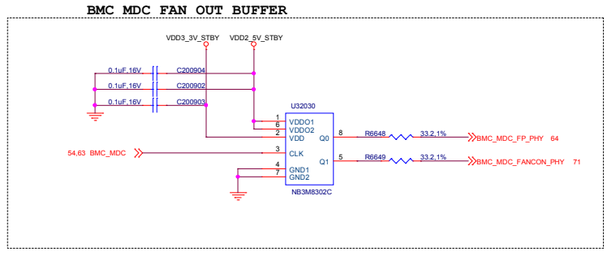

FRONT PANEL PHY EEPROM

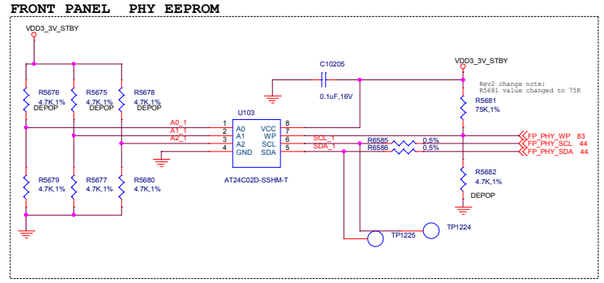

FRONT PANEL PHY

Title	CAVIUM
	WEDGE100C
Size	D
Document Number	80-00010-03
Rev	2.0
Date:	Thursday, December 22, 2016
Sheet	64 of 84

SYSTEM LED

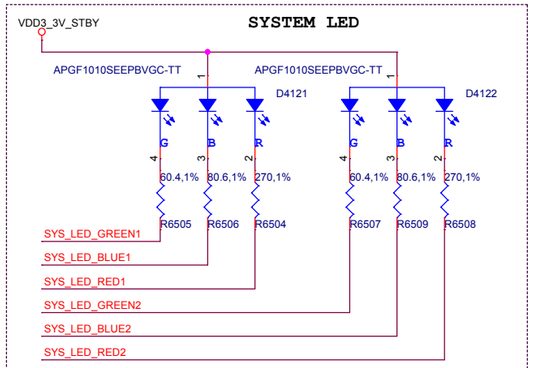

NOTE : LIGHT PIPE WILL BE USED TO DISPLAY SYSTEM LED STATUS ON FRONT PANEL

POWER STATUS LED

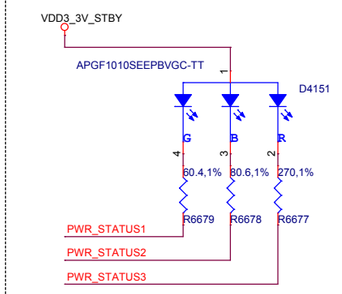

CHANGE NOTE:ADDED TRI COLOR LED TO SHOW POWER STATUS

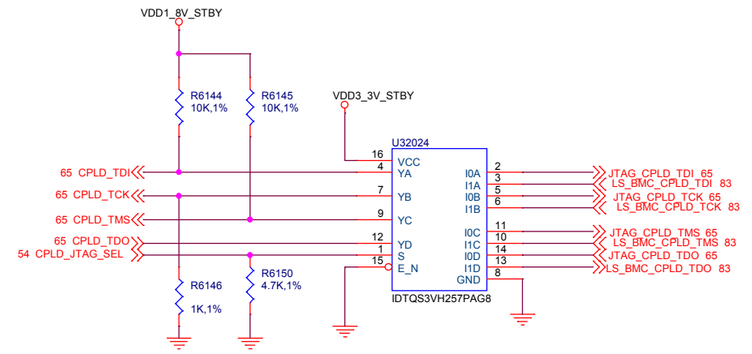

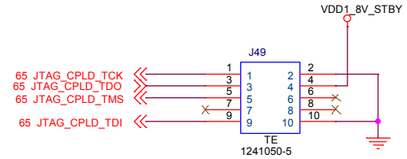

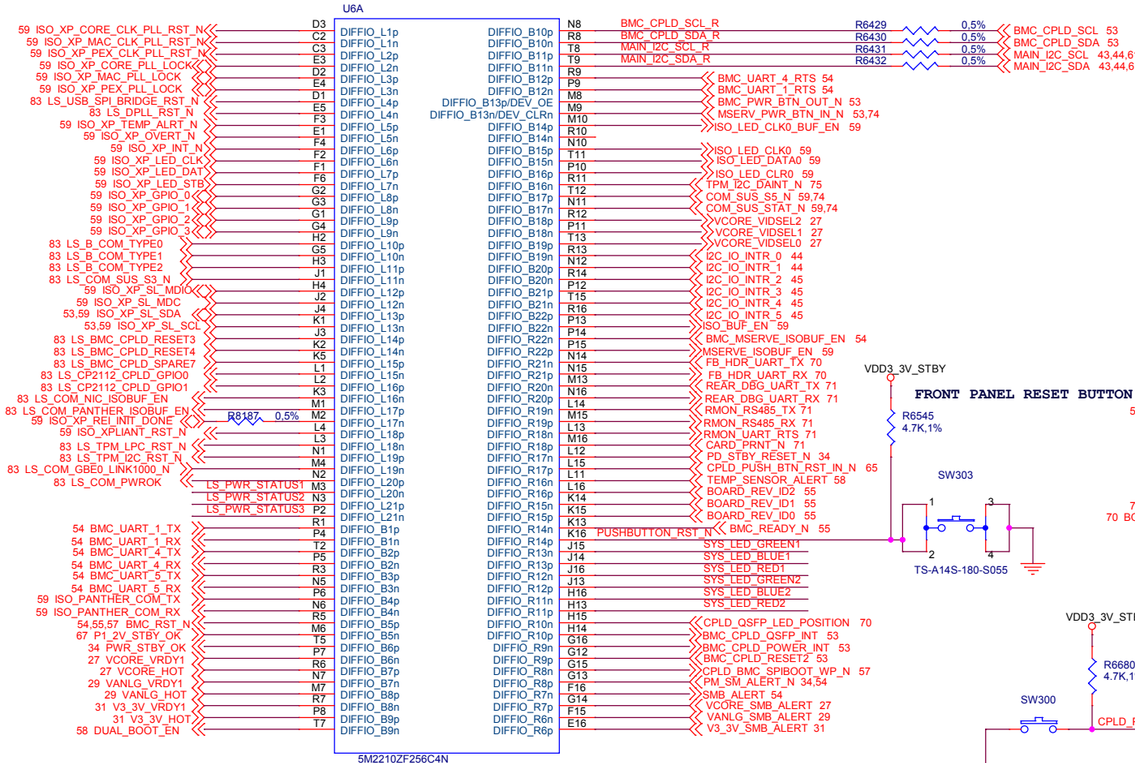

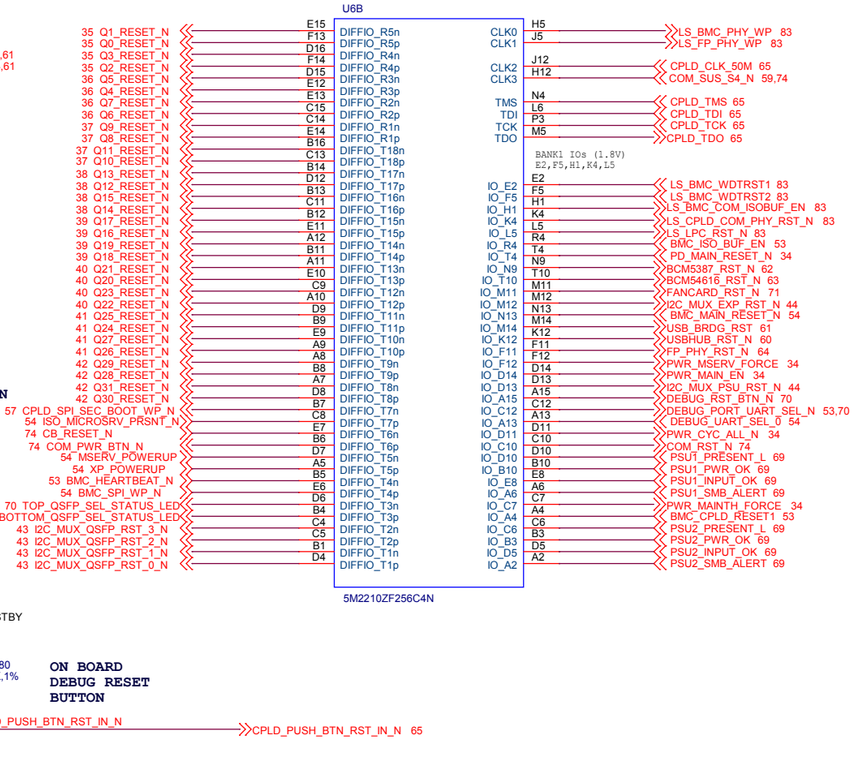

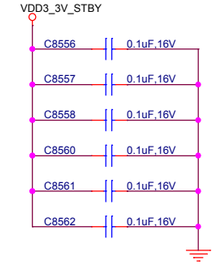

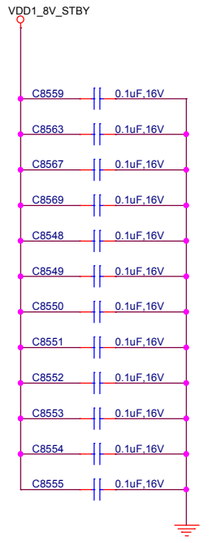

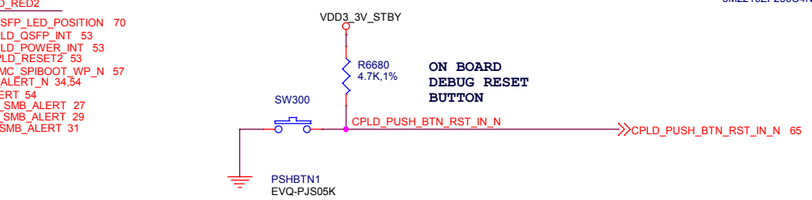

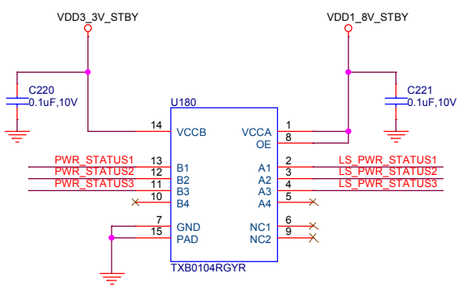

VCCA</=VCCB

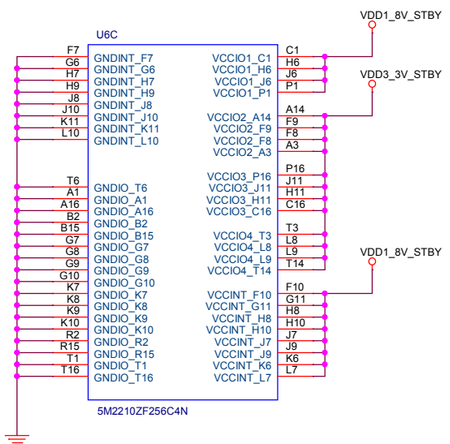

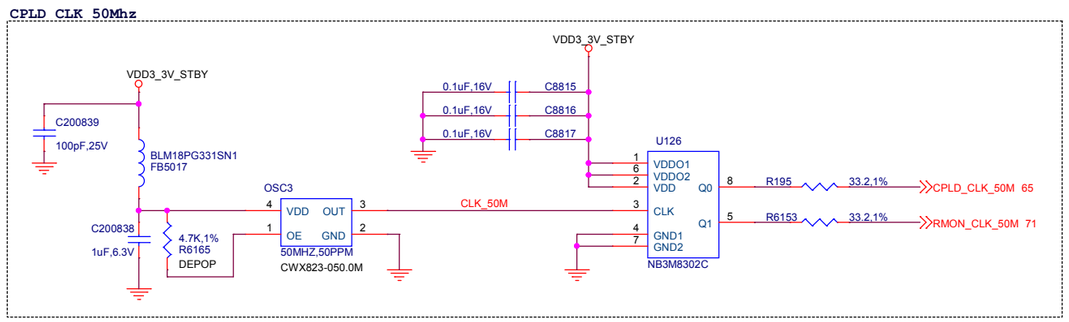

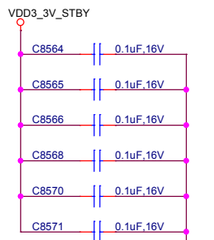

CPLD

CAVIUM

Title: WEDGE100C

Size	Document Number	Rev
C	80-00010-03	2.0

Date: Thursday, December 22, 2016 Sheet 65 of 84

BOARD	BASE BOARD ID
WEDGE100C	0X3F

I2C Baseboard ID = 0x3F

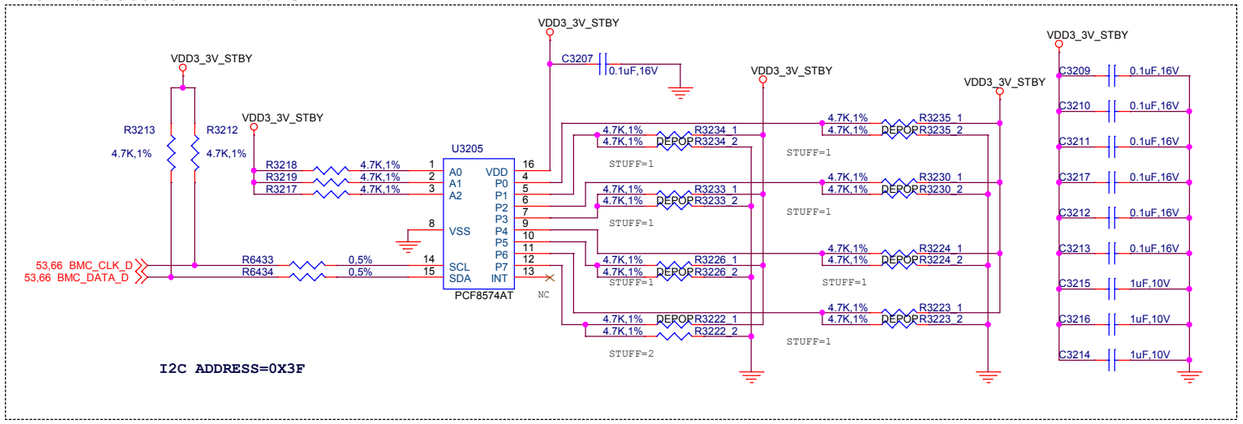

ADDITIONAL EEPROM

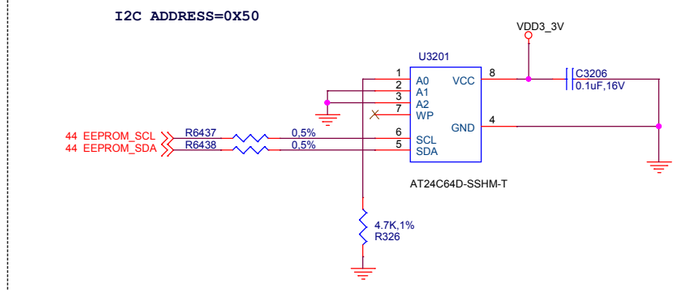

BOARD ID EEPROM

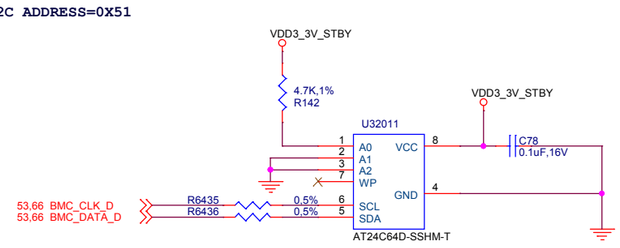

BOARD ID & EEPROMS

CAVIUM		
Title: WEDGE100C		
Size: C	Document Number: 80-00010-03	Rev: 2.0
Date: Thursday, December 22, 2016	Sheet 66 of 84	

PS 3.3V ISO,3A

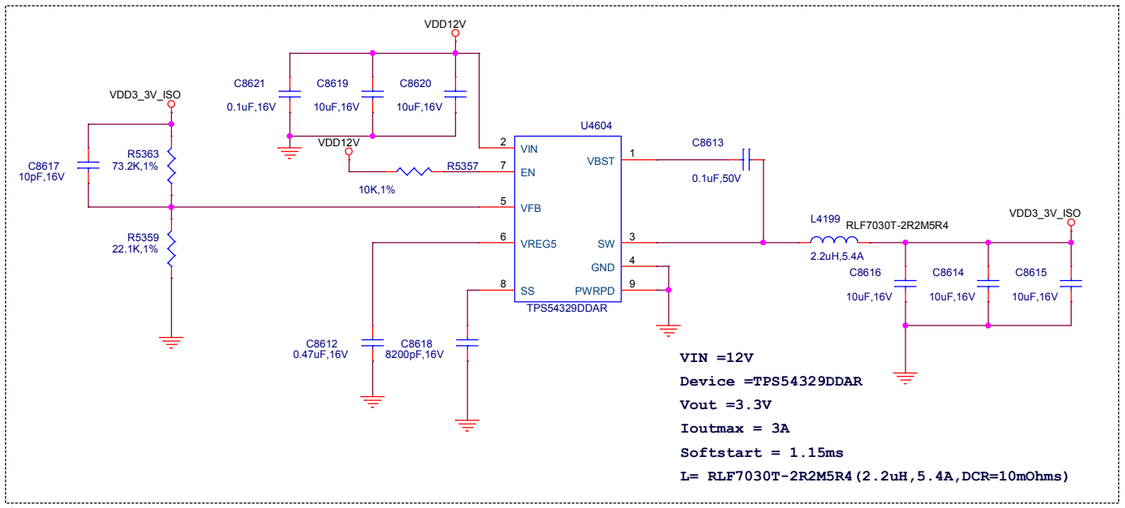

PS 6V STBY,1.5A

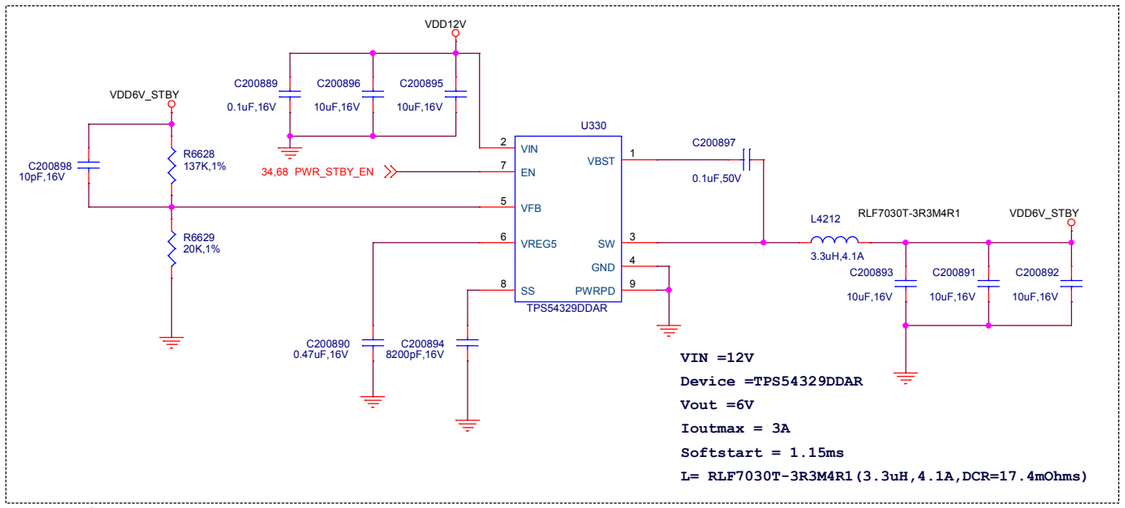

2.5V STBY,1.5A

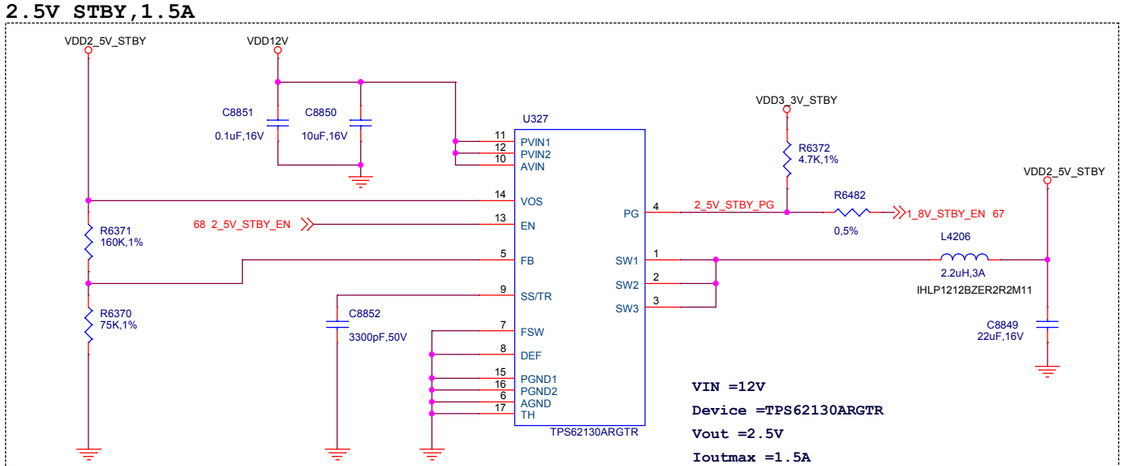

PS 1.8V STBY,1.5A

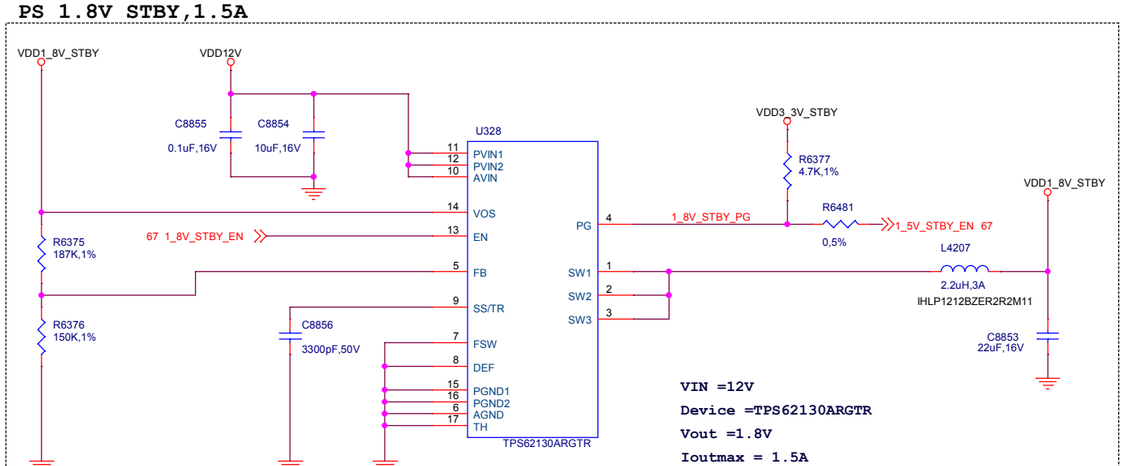

PS 1.5V STBY,1.5A

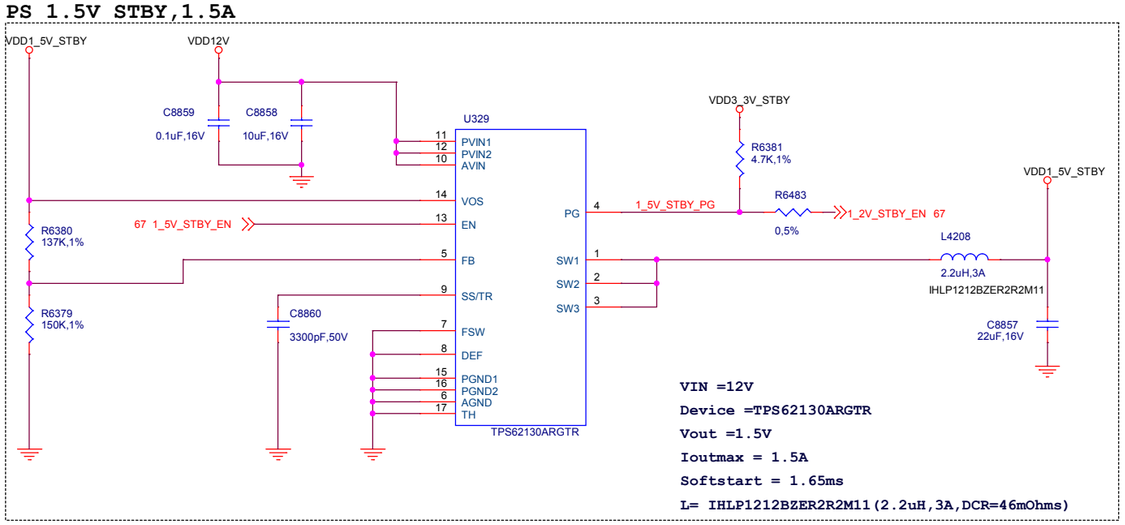

PS1.2V STBY,1.5A

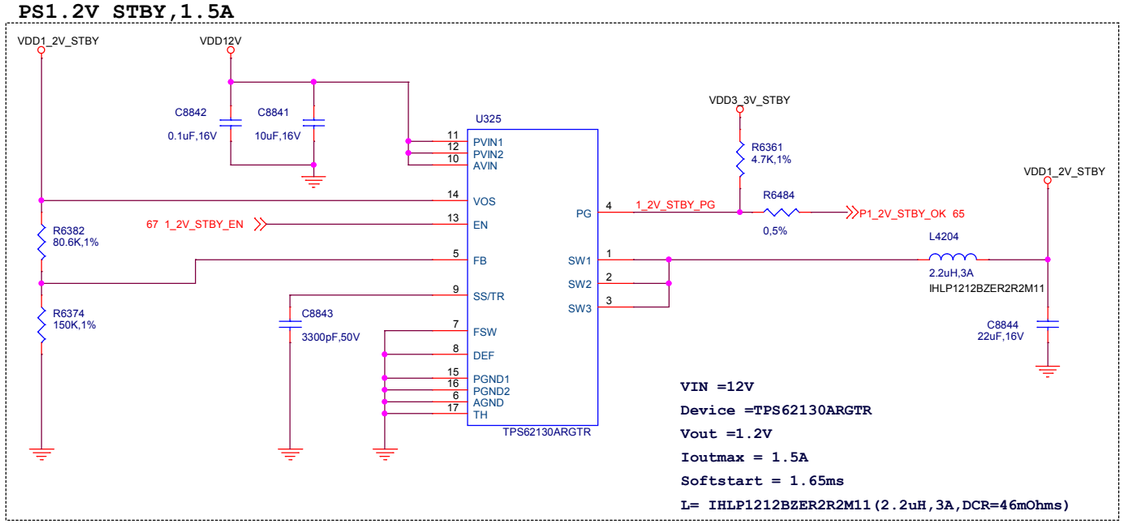

STBY POWER

CAVIUM		
Title: WEDGE100C		
Size: C	Document Number: 80-00010-03	Rev: 2.0
Date: Thursday, December 22, 2016	Sheet 67 of 84	

PS 3.3V STBY ,6A

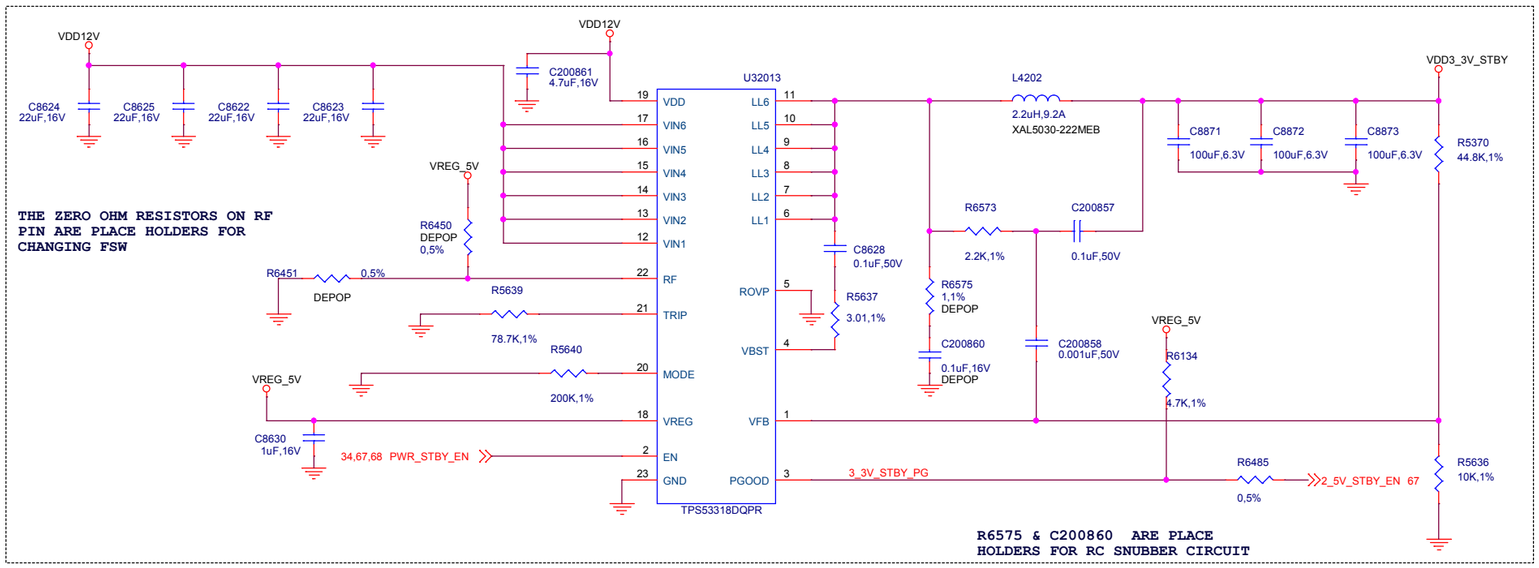

VIN =12V
Device =TPS53318DQPR
Vout =3.3V
Ioutmax = 6A
Iocp = 7.5A
Fsw= 500Khz
Rtrip= 78.7K
Rmode= 200K to GND: Softstart =2.8ms
L=XAL5030-222MEB(2.2uH,9.2A,DCR=13.2mOhms)
Cout=GRM31CR60J107ME39L(CER,100UF,1206,6.3V)

PS12V uSERVER,4A

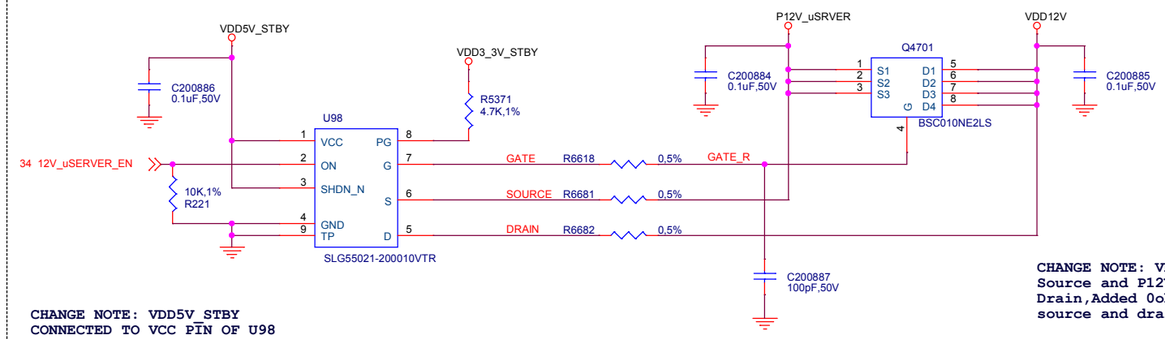

PS 5V STBY,1.5A

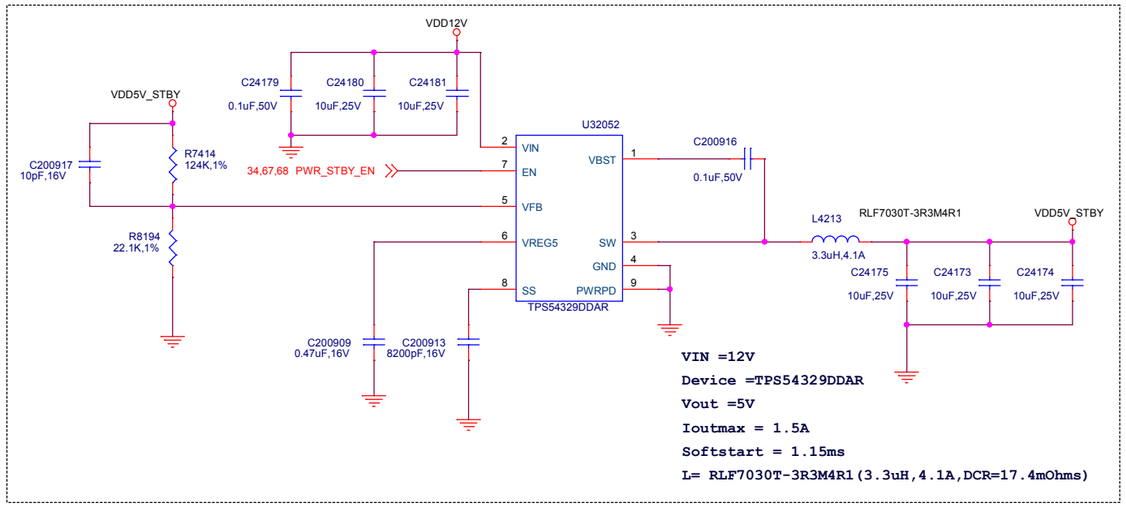

STBY POWER

CAVIUM		
Title: WEDGE100C		
Size: C	Document Number: 80-00010-03	Rev: 2.0
Date: Thursday, December 22, 2016	Sheet 68 of 84	

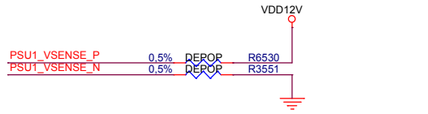

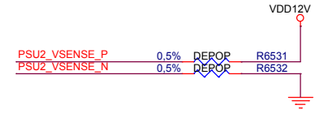

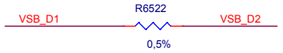

CHANGE NOTE:POPULATED R6549 AND R6548 (PULLUP FOR POWEROK)

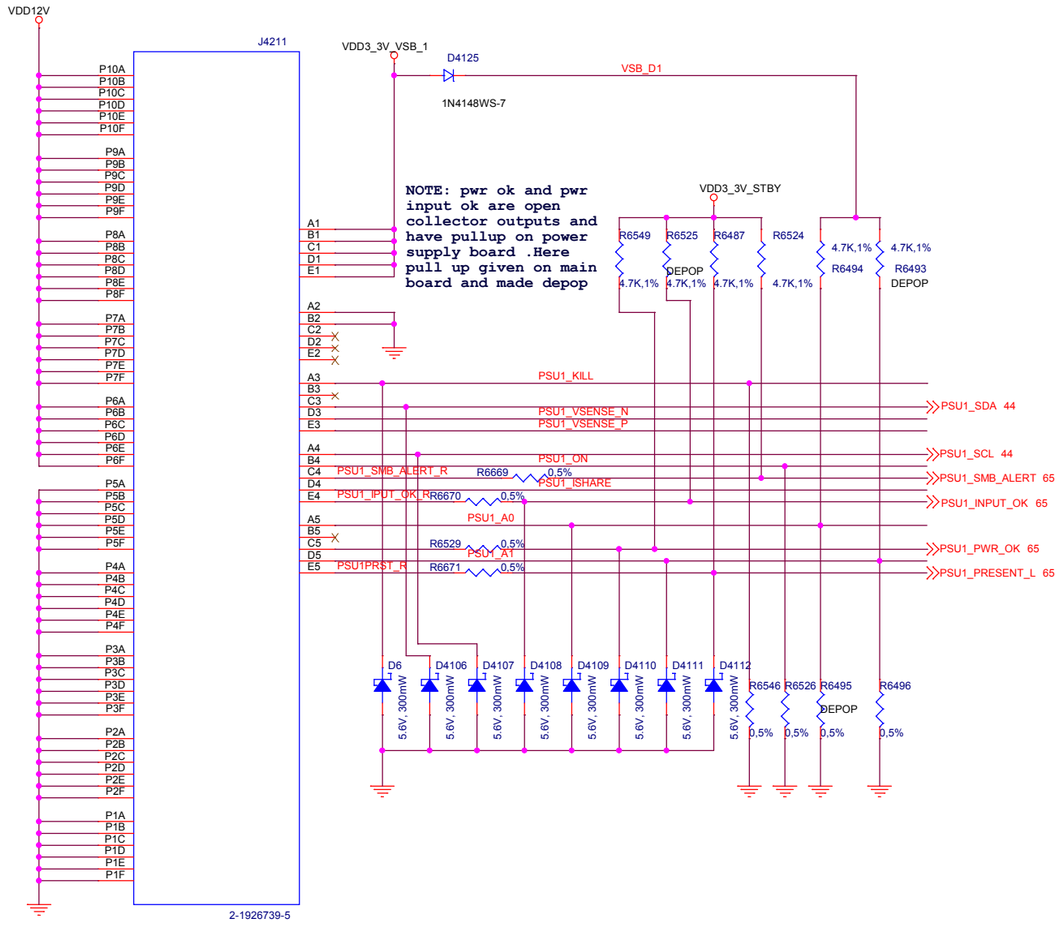

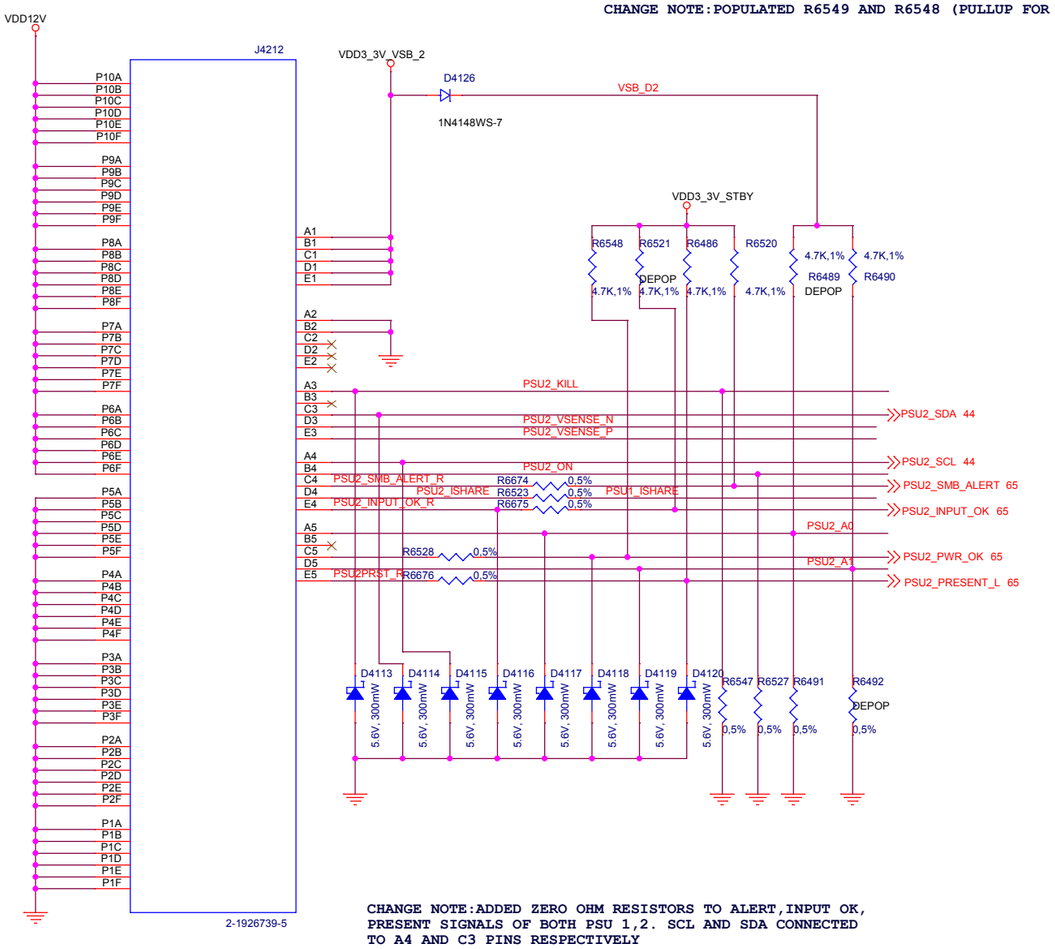

CHANGE NOTE:ADDED ZERO OHM RESISTORS TO ALERT,INPUT OK, PRESENT SIGNALS OF BOTH PSU 1,2. SCL AND SDA CONNECTED TO A4 AND C3 PINS RESPECTIVELY

POWER CONNECTOR

CAVIUM		
Title: WEDGE100C		
Size: C	Document Number: 80-00010-03	Rev: 2.0
Date: Thursday, December 22, 2016	Sheet 69 of 84	

FB DEBUG HEADER PORT

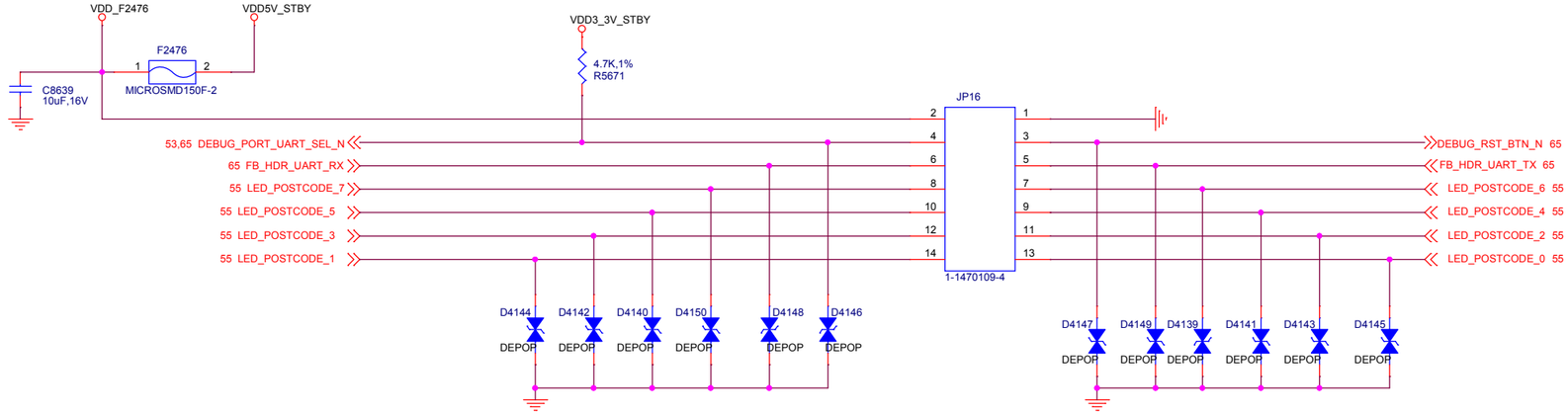

CHANGE NOTE:JP16 changed with connector 1-1470109-4 from wedgemini board.Signal pin out also changed as in wedge mini board

PANEL UART TRANSEIVER

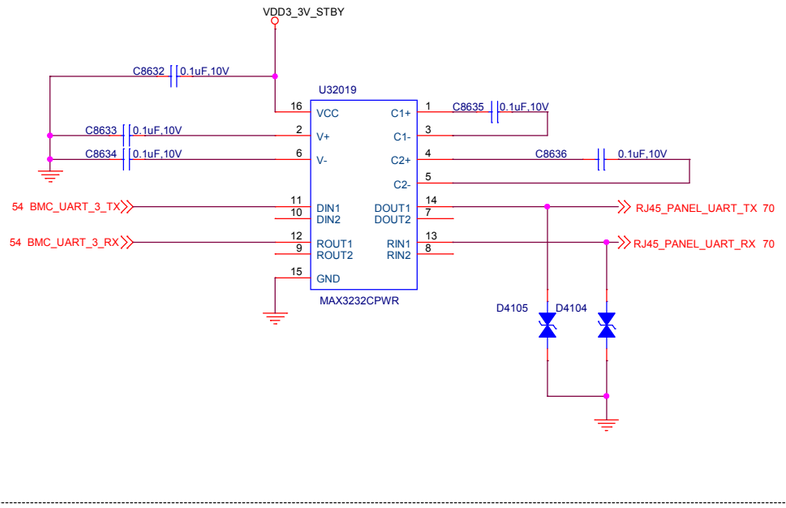

MANAGEMENT PORT AND PANEL UART CONSOLE

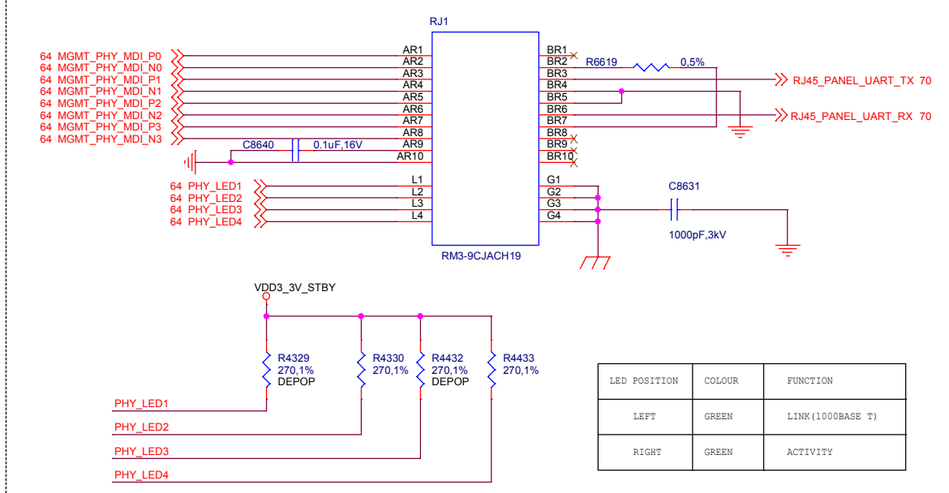

LED POSITION	COLOUR	FUNCTION
LEFT	GREEN	LINK(1000BASE T)
RIGHT	GREEN	ACTIVITY

TYPE A USB PORT

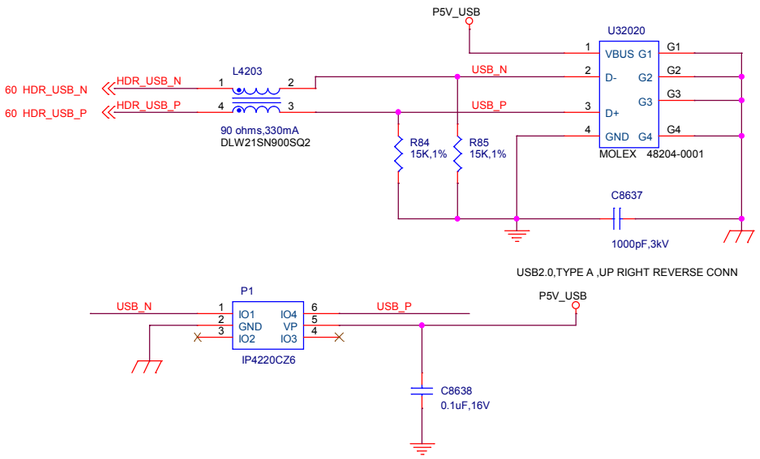

SELECTION STATUS LEDS

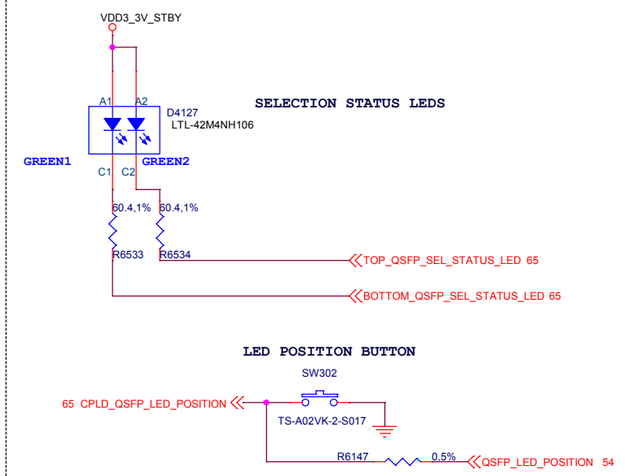

FRONT PANEL CONNECTORS

Title	CAVIUM WEDGE100C	
Size C	Document Number 80-00010-03	Rev 2.0
Date: Thursday, December 22, 2016	Sheet 70 of 84	

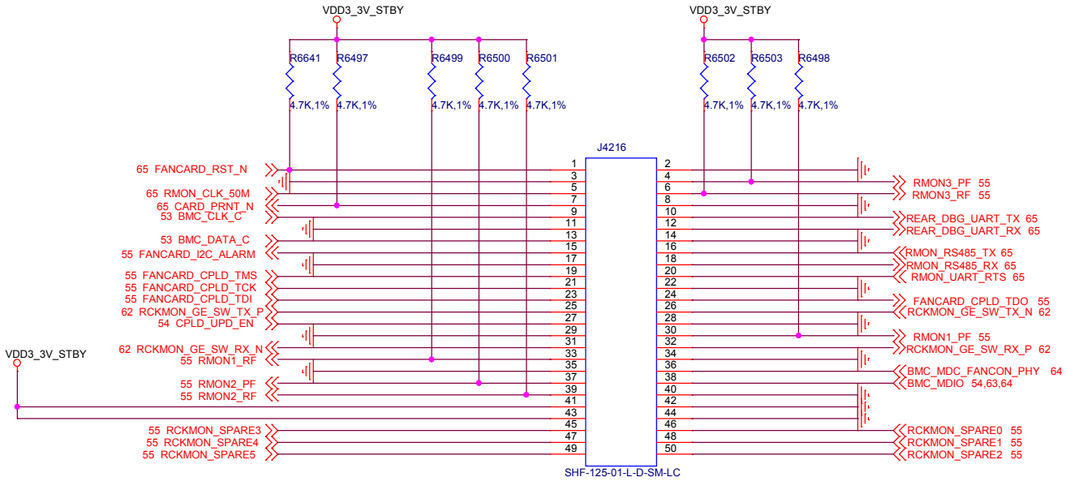

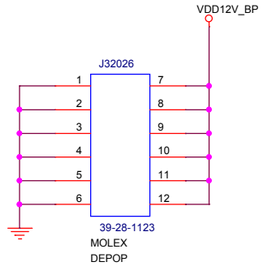

DC SKU POWER CONNECTOR

NOTE: DEPOP FOR AC SKU

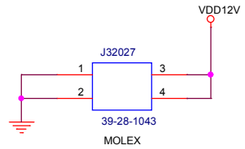

FAN POWER CONNECTOR

MOUNTING HOLES

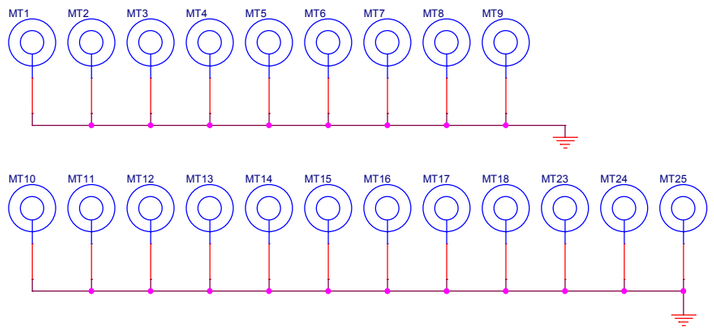

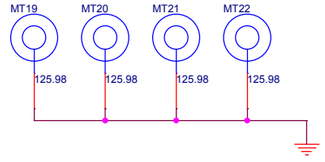

RACKMON & FAN CONNECTOR

CAVIUM		
Title: WEDGE100C		
Size: C	Document Number: 80-00010-03	Rev: 2.0
Date: Thursday, December 22, 2016	Sheet 71 of 84	

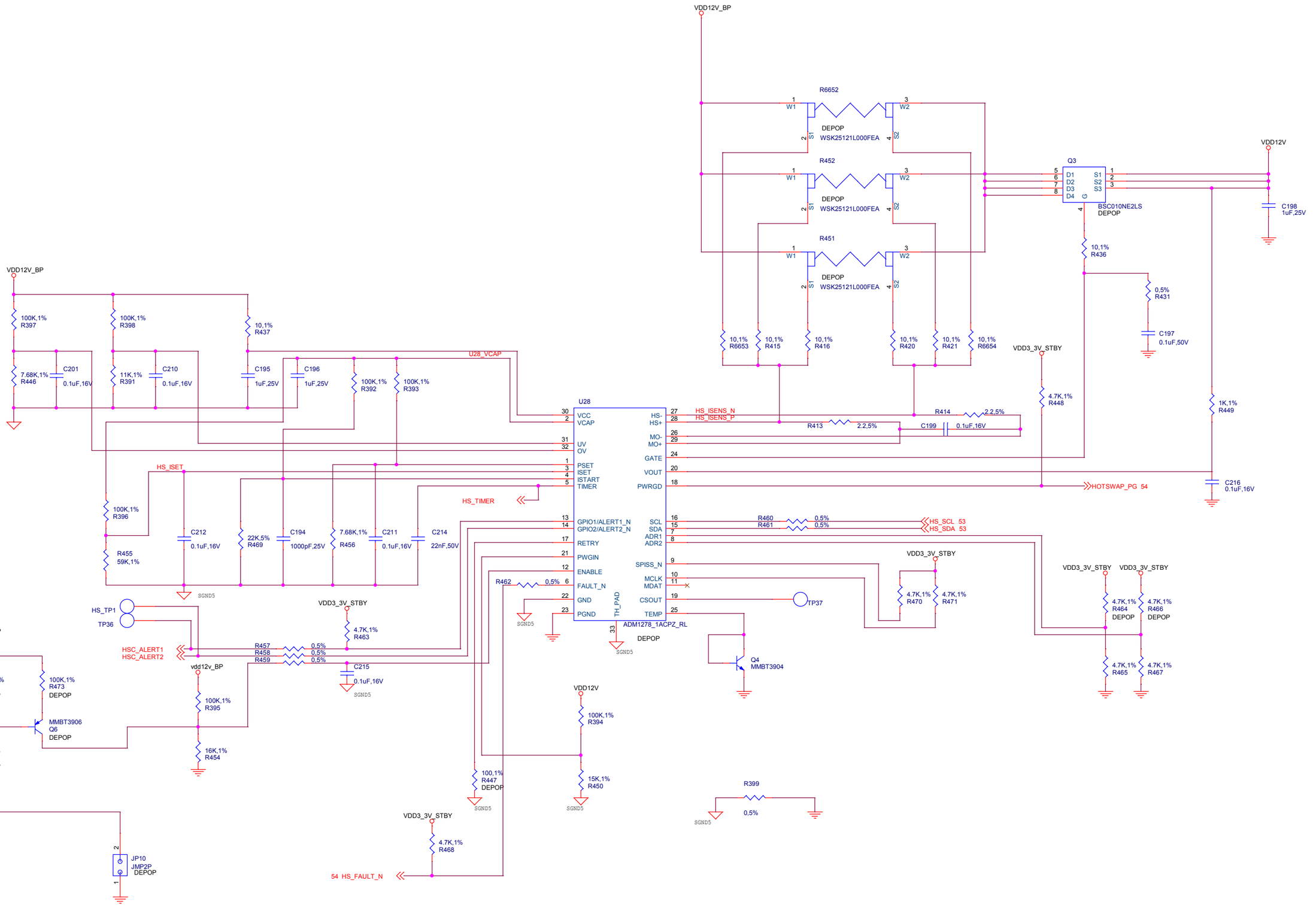

HOTSWAP CKT

CAVIUM

Title: WEDGE100C

Size	Document Number	Rev
C	80-00010-03	2.0

Date: Thursday, December 22, 2016 Sheet 72 of 84

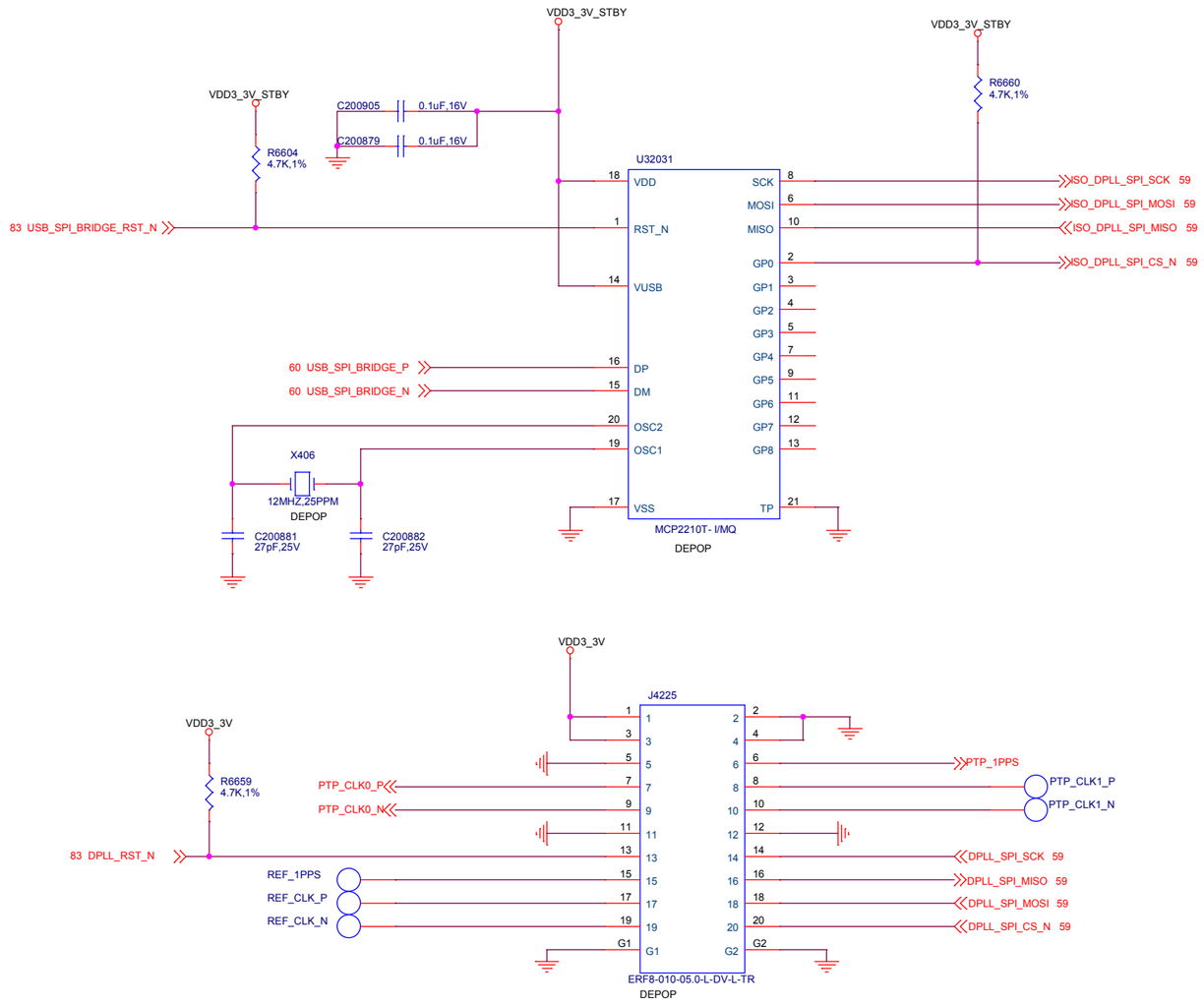

DPLL CONN & SPI BRIDGE

CAVIUM		
Title: WEDGE100C		
Size: C	Document Number: 80-00010-03	Rev: 2.0
Date: Thursday, December 22, 2016	Sheet 73 of 84	

PLACE HOLDER TO ADJUST DELAY IF REQUIRED

C24166 27pF,25V
R7412 DEPOP 0,5%
VDD3_3V_STBY
C24150 0.1uF,50V
U821
CLKOUT VDD
53 BMC_LPC_CLK
75 TPM_LPC_CLK
1Y0
1Y1
1Y2
1Y3
CLKIN
GND
COM_LPC_CLK 74
CDCVF2505PWR

VCC3_3V_SPIPWR
C24158 0.1uF,50V
U841
74 COM_FLASH_SPI_CLK
COM_TPM_SPI_CLK
33.2,1% R7410
33.2,1% R7411
VDD
1Y0
1Y1
1Y2
1Y3
OE
CLKIN
GND
R7381 4.7K,1%
COM_SPI_CLK 74
CDCV304PWR

VDD3_3V_STBY
R6772 4.7K,1%
R6773 4.7K,1%
ISO_COML_LPC_DRQ0_N 59
ISO_COML_LPC_DRQ1_N 59
R7342 4.7K,1% DEPOP
ISO_COML_TPM_PP 59
R7341 4.7K,1%

59,74 R_MSERV_NIC_SDA R7424 DEPOP 0,5%
R7423 0,5% MSERV_NIC_SDA 74
59,74 PANTHER_I2C_SDA R7748 DEPOP 0,5% COM_SMB_DAT 74
74,81 COM_MSATA_SMBDAT R7746 DEPOP 0,5%
59,74 R_MSERV_NIC_SDA R7451 0,5%

59,74 R_MSERV_NIC_SCL R7426 DEPOP 0,5%
R7425 0,5% MSERV_NIC_SCL 74
59,74 PANTHER_I2C_SCL R7749 DEPOP 0,5% COM_SMB_CK 74
74,81 COM_MSATA_SMBCK R7747 DEPOP 0,5%
59,74 R_MSERV_NIC_SCL R7450 0,5%

VDD3_3V_STBY
R7420 4.7K,1% ISO_BRG_THRM_N 55,59,74
R7418 DEPOP 4.7K,1% BRG_COM_BIOS_DIS0_N
R7419 DEPOP 4.7K,1% BRG_COM_BIOS_DIS1_N
R7355 DEPOP 4.7K,1% PANTHER_I2C_SCL 59,74
R7356 DEPOP 4.7K,1% PANTHER_I2C_SDA 59,74
R7340 4.7K,1% COM_GBE0_LINK1000_N 74,83
R6767 DEPOP 4.7K,1% COM_SUS_S3_N
R6768 DEPOP 4.7K,1% COM_SUS_S4_N
R7343 DEPOP 4.7K,1% COM_SUS_S5_N
R7344 DEPOP 4.7K,1% COM_SUS_STAT_N
R6856 DEPOP 4.7K,1% COM_MSATA_SMBDAT 74,81
R6857 DEPOP 4.7K,1% COM_MSATA_SMBCK 74,81

VCC3_3V_SPIPWR
R6769 DEPOP 4.7K,1%
R6770 4.7K,1%
74 SPI_FLASH_CS_N
74 SPI_FLASH_MISO
J100
CS_N VCC
DO HOLD_N
WP_N CLK
GND DI
ACA-SPI-004-F01
R6745 4.7K,1% DEPOP
VCC3_3V_SPIPWR
C979 1uF,6.3V
R6771 4.7K,1%
SPI_FLASH_SCK 74
SPI_FLASH_MOSI 74
VCC3_3V_SPIPWR

SPI FLASH SOCKET

U99
W25Q64FVSSIG
SPI FLASH

NOTE: SPI FLASH U99 NEED TO BE PLACED IN J100

J4228A

77 COM6_PHY_MDI_P0	A13	GBE0_MDI0+	
77 COM6_PHY_MDI_N0	A12	GBE0_MDI0-	
77 COM6_PHY_MDI_P1	A10	GBE0_MDI1+	
77 COM6_PHY_MDI_N1	A9	GBE0_MDI1-	
77 COM6_PHY_MDI_P2	A7	GBE0_MDI2+	
77 COM6_PHY_MDI_N2	A6	GBE0_MDI2-	
77 COM6_PHY_MDI_P3	A3	GBE0_MDI3+	
77 COM6_PHY_MDI_N3	A2	GBE0_MDI3-	
77 COM_CTREF	A14	GBE0_CTREF	
	B2	GBE0_ACT#	
	A8	GBE0_LINK#	
	A4	GBE0_LINK100#	
74,83 COM_GBE0_LINK1000_N	A5	GBE0_LINK1000#	
	A30	AC/HDA_RST#	
	A32	AC/HDA_BITCLK	
	A29	AC/HDA_SYNC	
	A33	AC/HDA_SDOUT	
	B30	AC/HDA_SDIN0	
	B29	AC/HDA_SDIN1	
	B28	AC/HDA_SDIN2	
59 COM_LPC_SERIRQ_N	A50	LPC_SERIRQ	
59 COM_LPC_FRAME_N	B3	LPC_FRAME#	
59 COM_LPC_AD0	B4	LPC_AD0	
59 COM_LPC_AD1	B5	LPC_AD1	
59 COM_LPC_AD2	B6	LPC_AD2	
59 COM_LPC_AD3	B7	LPC_AD3	
59 COML_LPC_DRQ0_N	B8	LPC_DRQ0#	
59 COML_LPC_DRQ1_N	B9	LPC_DRQ1#	
74 COM_LPC_CLK	B10	LPC_CLK	
74 COM_SMB_DAT	B14	SMB_DAT	
74 COM_SMB_CK	B13	SMB_CK	
59,74 COM_SMB_ALRT_N	B15	SMB_ALERT#	
74 MSERV_NIC_SDA	B34	I2C_DAT	
74 MSERV_NIC_SCL	B33	I2C_CK	
59,83 COM_SUS_S3_N	A15	SUS_S3#	
59,65 COM_SUS_S4_N	A18	SUS_S4#	
59,65 COM_SUS_S5_N	A24	SUS_S5#	
59,65 COM_SUS_STAT_N	B18	SUS_STAT#	
	A27	BATLOW#	
59 BRG_THRMTRIP_N	A35	THRMTRIP#	
59 BRG_THRM_N	B35	THRM#	
	B32	SPKR	
59 BRG_COM_GPI_1	A54	GPI0	
	A63	GPI1	
	A67	GPI2	
	A85	GPI3	
59 BRG_COM_GPO_2	A93	GPO0	
	B54	GPO1	
	B57	GPO2	
	B63	GPO3	
	A91	SPI_POWER	
74 COM_SPI_MISO	A92	SPI_MISO	
74 COM_SPI_CLK	A94	SPI_CLK	
74 COM_SPI_MOSI	A95	SPI_MOSI	
74 COM_SPI_CS_N	B97	SPI_CS#	

SATA0_TX+	A16		SATA0_COM_TX_P 80
SATA0_TX-	A17		SATA0_COM_TX_N 80
SATA0_RX+	A19		SATA0_COM_RX_P 80
SATA0_RX-	A20		SATA0_COM_RX_N 80
SATA1_TX+	B16		SATA1_COM_TX_P 81
SATA1_TX-	B17		SATA1_COM_TX_N 81
SATA1_RX+	B19		SATA1_COM_RX_P 81
SATA1_RX-	B20		SATA1_COM_RX_N 81
SATA2_TX+	A22		
SATA2_TX-	A23		
SATA2_RX+	A25		
SATA2_RX-	A26		
SATA3_TX+	B22		
SATA3_TX-	B23		
SATA3_RX+	B25		
SATA3_RX-	B26		
S_ATA_ACT#	A28		COML_S_ATA_ACT_N 59
USB0+	A46		MSERVE_COM_USB_P 60
USB0-	A45		MSERVE_COM_USB_N 60
USB1+	B46		
USB1-	B45		
USB2+	A43		
USB2-	A42		
USB3+	B43		
USB3-	B42		
USB4+	A40		
USB4-	A39		
USB5+	B40		
USB5-	B39		
USB6+	A37		
USB6-	A36		
USB7+	B37		
USB7-	B36		
USB_0_1_OC#	B44		
USB_2_3_OC#	A44		
USB_4_5_OC#	B38		
USB_6_7_OC#	A38		
TPM_PP	A96		COML_TPM_PP 59
PWRBTN#	B12		COM_PWR_BTN_N 65,74
PWR_OK	B24		COM_PWROK 59,74,83
CB_RESET#	B50		CB_RESET_N 65,74
SYS_RESET#	B49		COM_RST_N 65,74
WDT	B27		COM_BRG_WDT 59
TYPE10#	A97		
BIOS_DIS0#	A34		BUFF_BRG_COM_BIOS_DIS0_N 59
BIOS_DIS1#	B88		BUFF_BRG_COM_BIOS_DIS1_N 59

VDD3_3V_STBY
R7348 4.7K,1% DEPOP

3-5353652-6
Stacking height eight 8mm

PANTHER_I2C_SCL 1 2
PANTHER_I2C_SDA 3 4
JP9
DEPOP

C113 0.1uF,50V
VDD3_3V_STBY
4.7K,1% R248
SW2
MSERV_PWR_BTN_IN_N 53,65
PSHBTN1
EVQPE105K

VDD3_3V_STBY
R6750 4.7K,1% DEPOP
R6751 4.7K,1%
VDD5V_STBY
80 HDD_LED_N
59,81 ISO_COML_S_ATA_ACT_N
D4152
K1
K2
C
BAW56LT1G
D4153
LED
R6765 150,5%

VDD3_3V_STBY
4.7K,1% R5776
4.7K,1% R5754
4.7K,1% R252
4.7K,1% R192
COM_SMB_ALRT_N 59,74
COM_RST_N 65,74
CB_RESET_N 65,74
COM_PWR_BTN_N 65,74
COM_PWROK 59,74,83
R6855 75K,1%

NOTE: COM_PWROK IS PULLED DOWN ,ELSE IT WILL BE FLOATING BEFORE ISO BUFFER IS ENABLED

Rev2 change note:
R6855 value changed to 75K

VDD3_3V_STBY
R6757 4.7K,1% DEPOP
R6758 4.7K,1% DEPOP
R6759 4.7K,1% DEPOP
R6761 4.7K,1%
R6760 4.7K,1%
R6762 4.7K,1%
U32043
A0 A1 A2 VSS SCL SDA
VDD P0 P1 P2 P3 P4 P5 P6 P7 INT
59,74 PANTHER_I2C_SCL
59,74 PANTHER_I2C_SDA
PCA9534DWR
C980 0.1uF,50V
BRG_COM_BIOS_DIS0_N 55,59
BRG_COM_BIOS_DIS1_N 55,59
COM_SPI_SEL 55,74
ISO_COM_BRG_WDT 55,59
ISO_BRG_THRMTRIP_N 55,59
ISO_BRG_THRM_N 55,59,74
ISO_BRG_COM_GPI_1 59
ISO_BRG_COM_GPO_2 59
VDD3_3V_STBY
R6766 4.7K,1%

I2C ADDRESS=0X20

VDD3_3V_STBY
VDD3_3V_STBY
R7421 4.7K,1% DEPOP
74 SPI_FLASH_MOSI
74 SPI_FLASH_SCK
74 SPI_FLASH_CS_N
74 SPI_FLASH_MISO
55,74 COM_SPI_SEL
55 COM6_BUF_EN
R6752 4.7K,1%
R7448 4.7K,1%
U32042
VCC 1A 2A 3A 4A S OE_N
1B1 1B2 2B1 2B2 3B1 3B2 4B1 4B2 GND
SN74CBTLV3257
COM_SPI_MOSI 74
BMC_EEPROM1_SPI_MOSI 54,62
COM_FLASH_SPI_CLK 74
BMC_EEPROM1_SPI_SCK 54,62
COM_SPI_CS_N 74
BMC_EEPROM1_SPI_SS 54,62
COM_SPI_MISO 74
BMC_EEPROM1_SPI_MISO 54,62

NOTE: COM_SPI_SEL AND SWITCH_EEPROM1_WRT ,SWITCH1_EEPROM1_WRT SHOULD NOT BE ENABLED AT SAME TIME BECAUSE SPI SIGNALS ARE SHARED

COM6 CONNECTOR PAGE 1

CAVIUM

Title: WEDGE100C

Size	Document Number	Rev
C	80-00010-03	2.0

Date: Thursday, December 22, 2016 Sheet 74 of 84

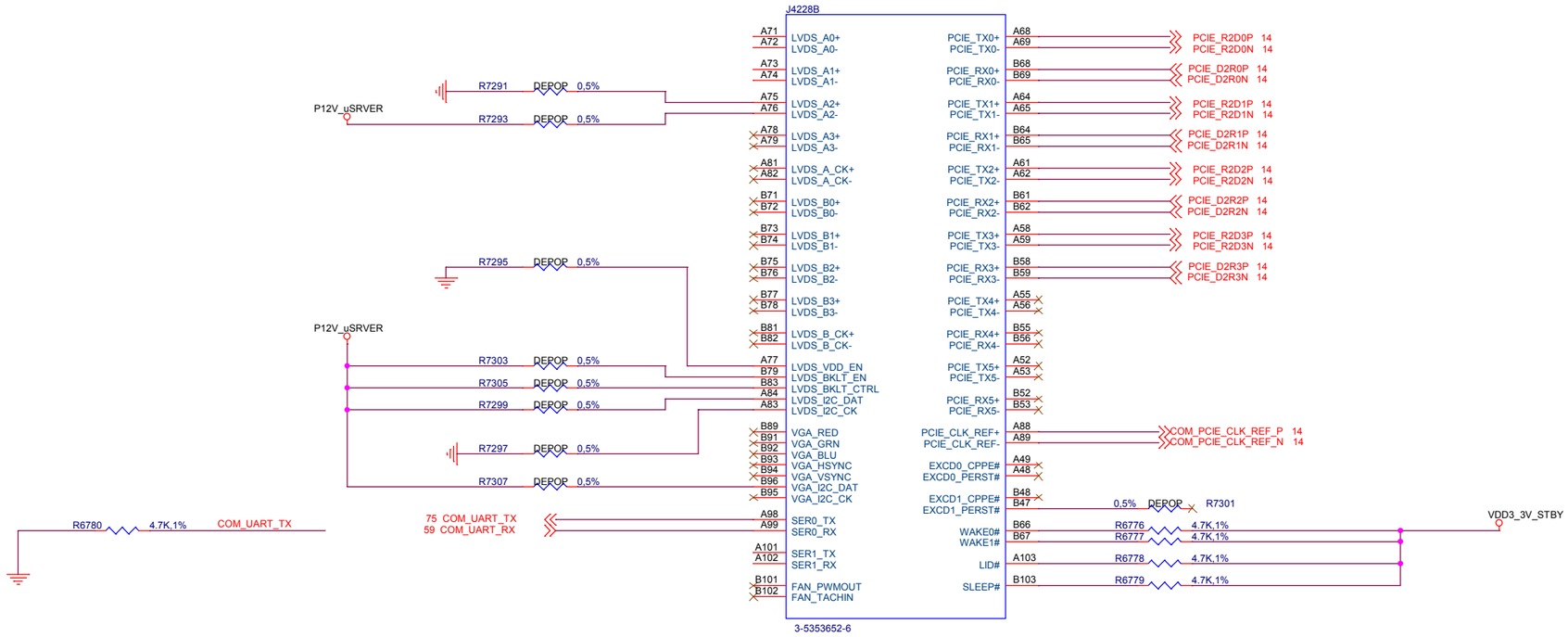

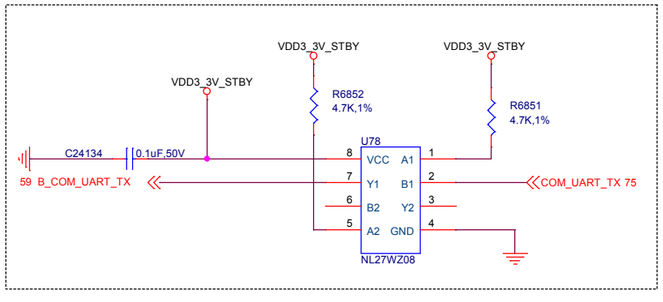

COMe INTEGRATION CHANGE NOTE:
MUX TO SELECT BMC OR COM SPI TO TPM MODULE DELETED

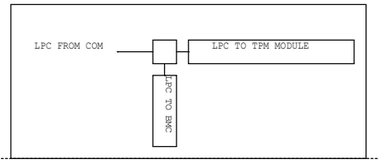

TPM BASED LPC

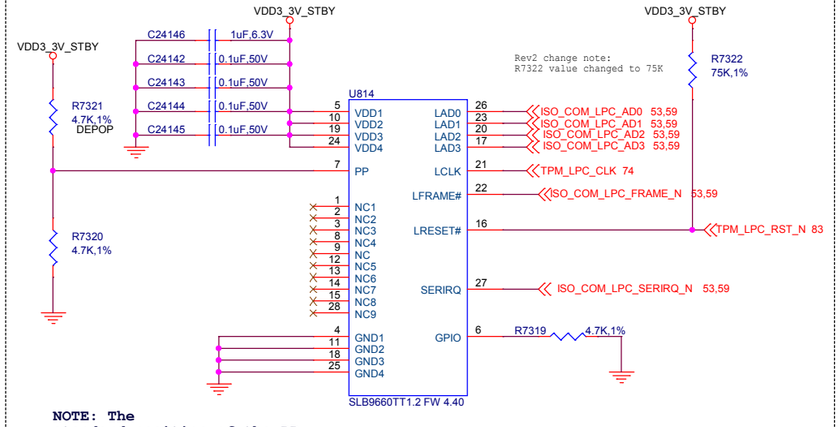

NOTE: The standard position of the PP pin IS GND. If the pin is connected to VDD, some special commands are enabled

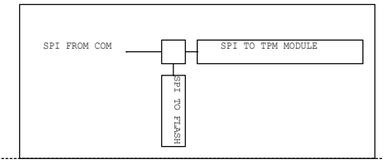

I2C BASED TPM

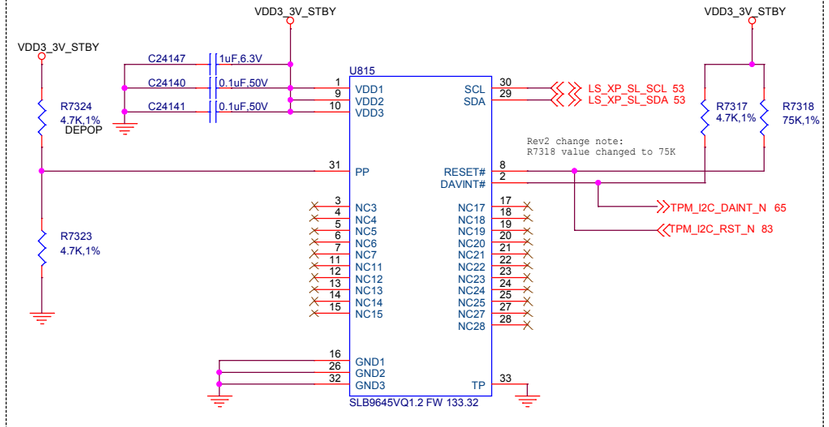

NOTE: The standard position of the PP pin IS GND. If the pin is connected to VDD, some special commands are enabled

COM6 CONNECTOR PAGE 2

CAVIUM		
Title: WEDGE100C		
Size: C	Document Number: 80-00010-03	Rev: 2.0
Date: Thursday, December 22, 2016	Sheet 75 of 84	

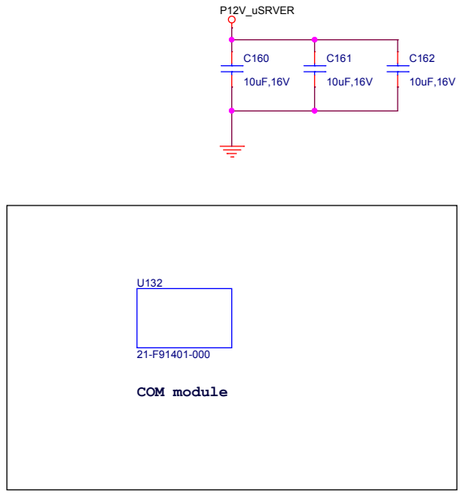

PEM NUTS

COMe INTEGRATION CHANGE NOTE:
PEM NUTS FOR COMe MODULE ADDED

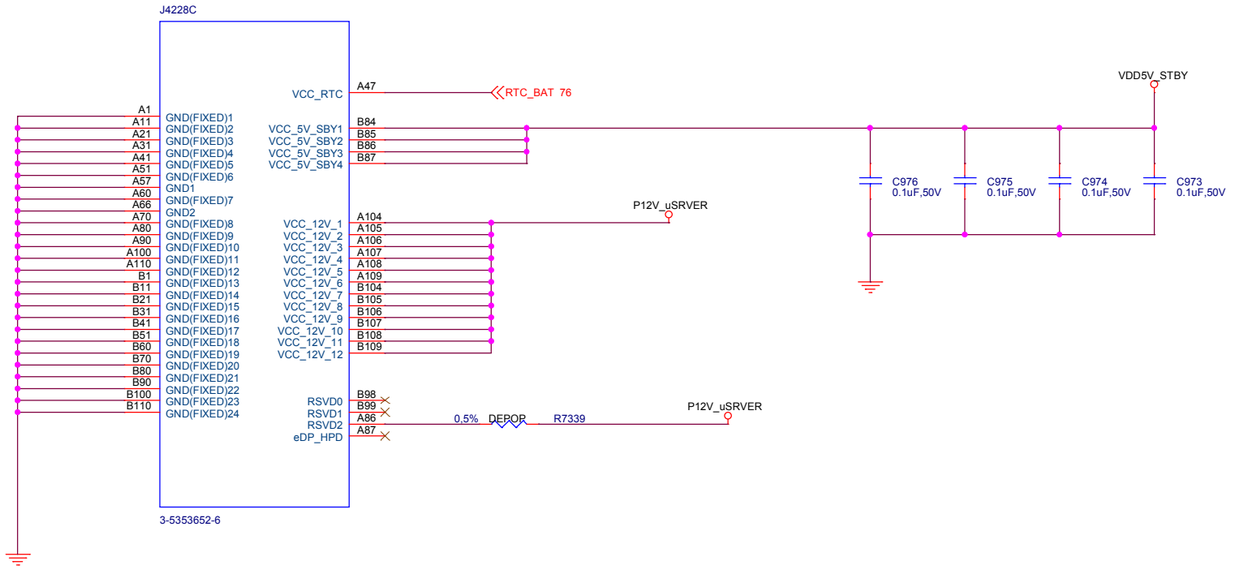

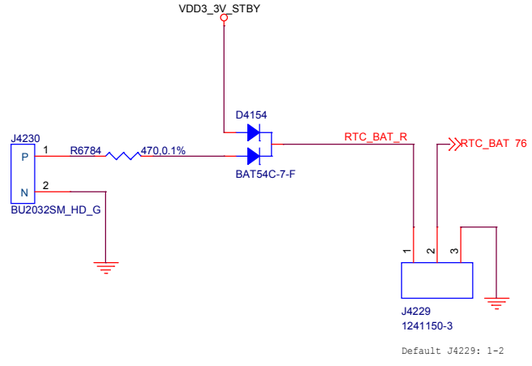

COM6 CONNECTOR PAGE 3

CAVIUM		
Title: WEDGE100C		
Size: C	Document Number: 80-00010-03	Rev: 2.0
Date: Thursday, December 22, 2016	Sheet 76 of 84	

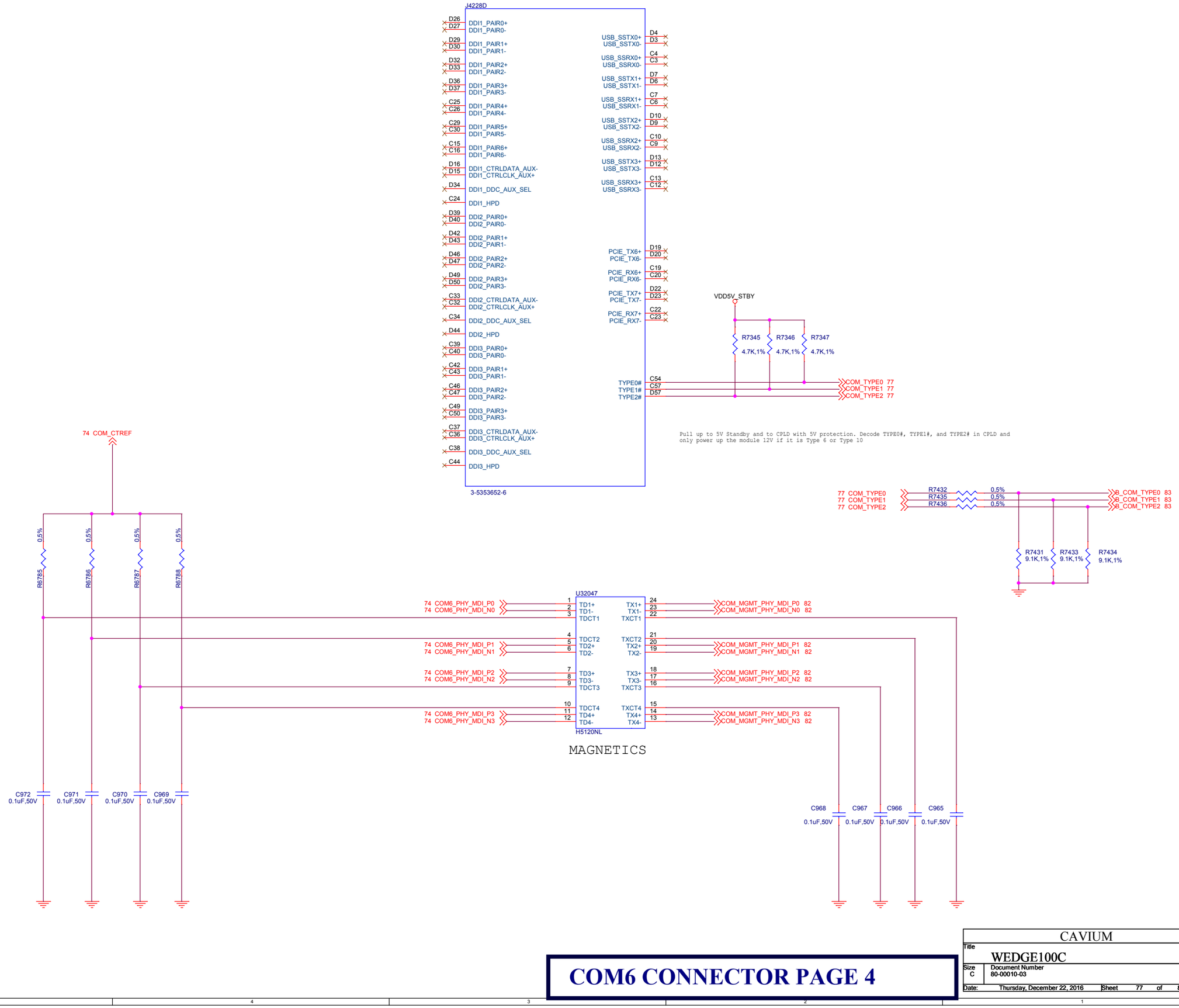

COM6 CONNECTOR PAGE 4

CAVIUM		
Title: WEDGE100C		
Size: C	Document Number: 80-00010-03	Rev: 2.0
Date: Thursday, December 22, 2016	Sheet 77 of 84	

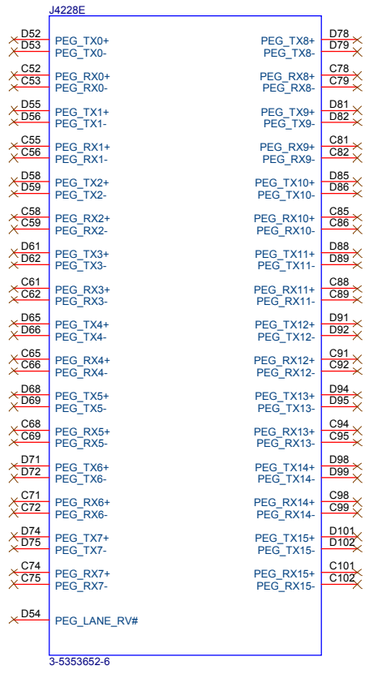

COM6 CONNECTOR PAGE 5

CAVIUM		
Title: WEDGE100C		
Size: C	Document Number: 80-00010-03	Rev: 2.0
Date: Thursday, December 22, 2016	Sheet 78 of 84	

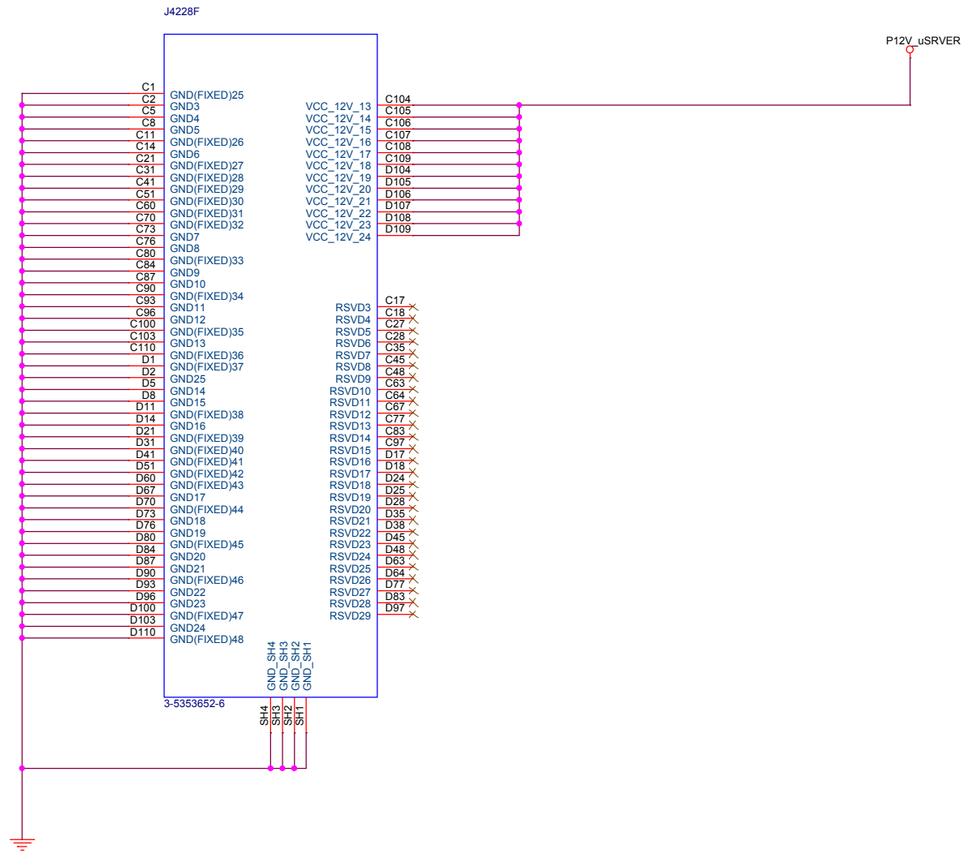

COM6 CONNECTOR PAGE 6

CAVIUM		
Title: WEDGE100C		
Size: C	Document Number: 80-00010-03	Rev: 2.0
Date: Thursday, December 22, 2016	Sheet 79 of 84	

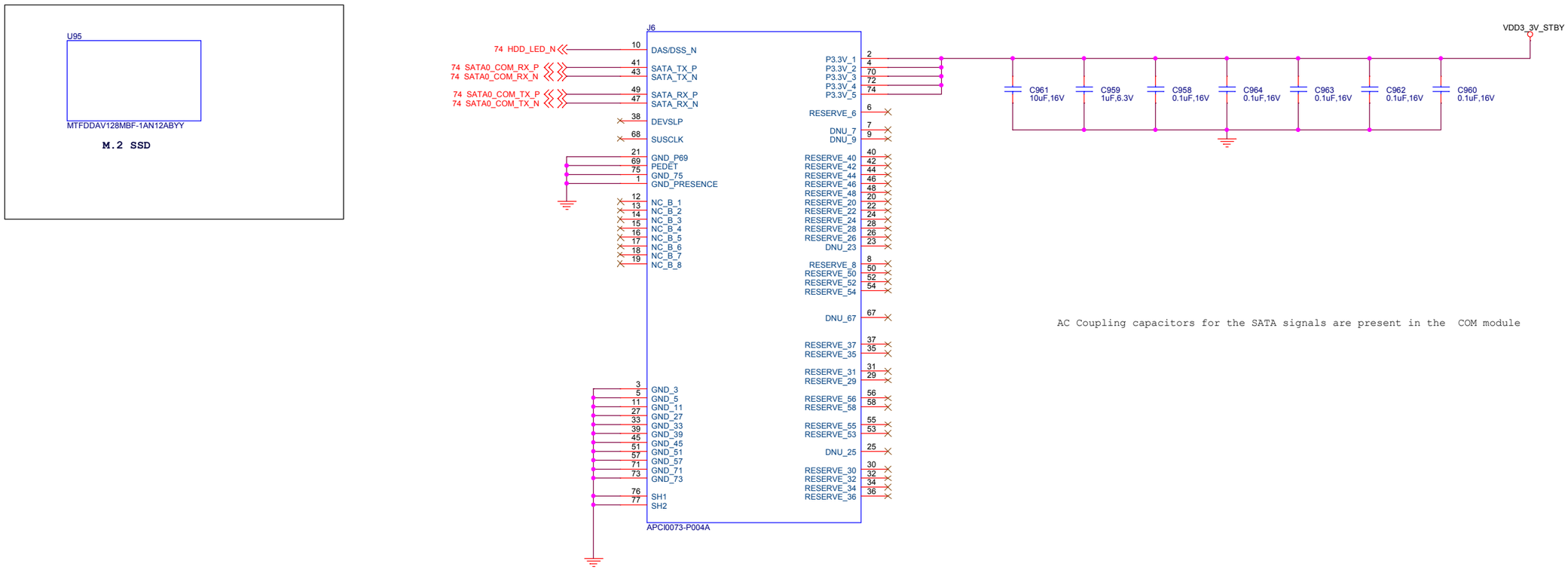

AC Coupling capacitors for the SATA signals are present in the COM module

M.2SSD CONNECTOR

CAVIUM		
Title: WEDGE100C		
Size: C	Document Number: 80-00010-03	Rev: 2.0
Date: Thursday, December 22, 2016	Sheet 80 of 84	

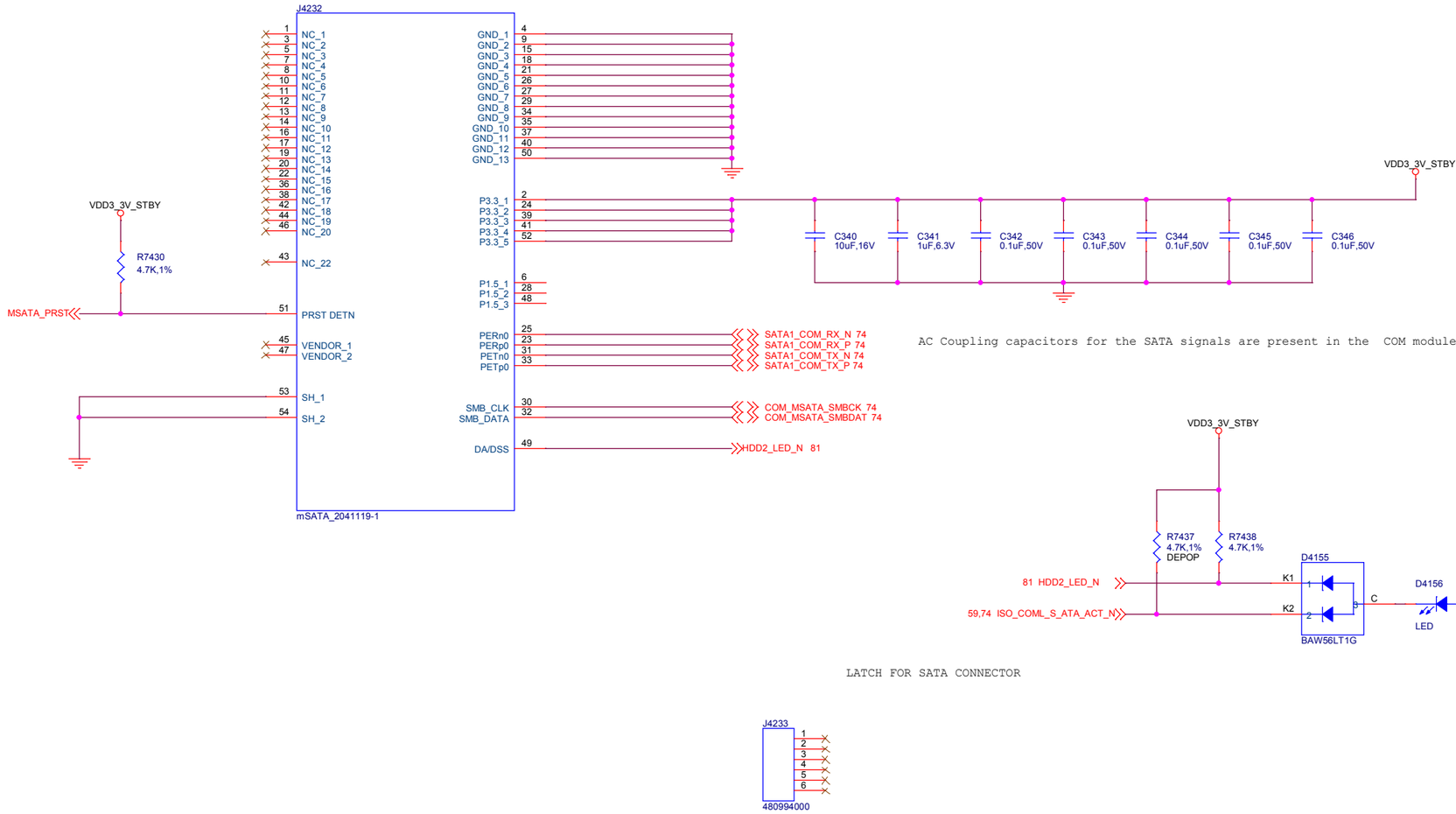

MSATA CONNECTOR

CAVIUM		
Title: WEDGE100C		
Size: C	Document Number: 80-00010-03	Rev: 2.0
Date: Thursday, December 22, 2016	Sheet 81 of 84	

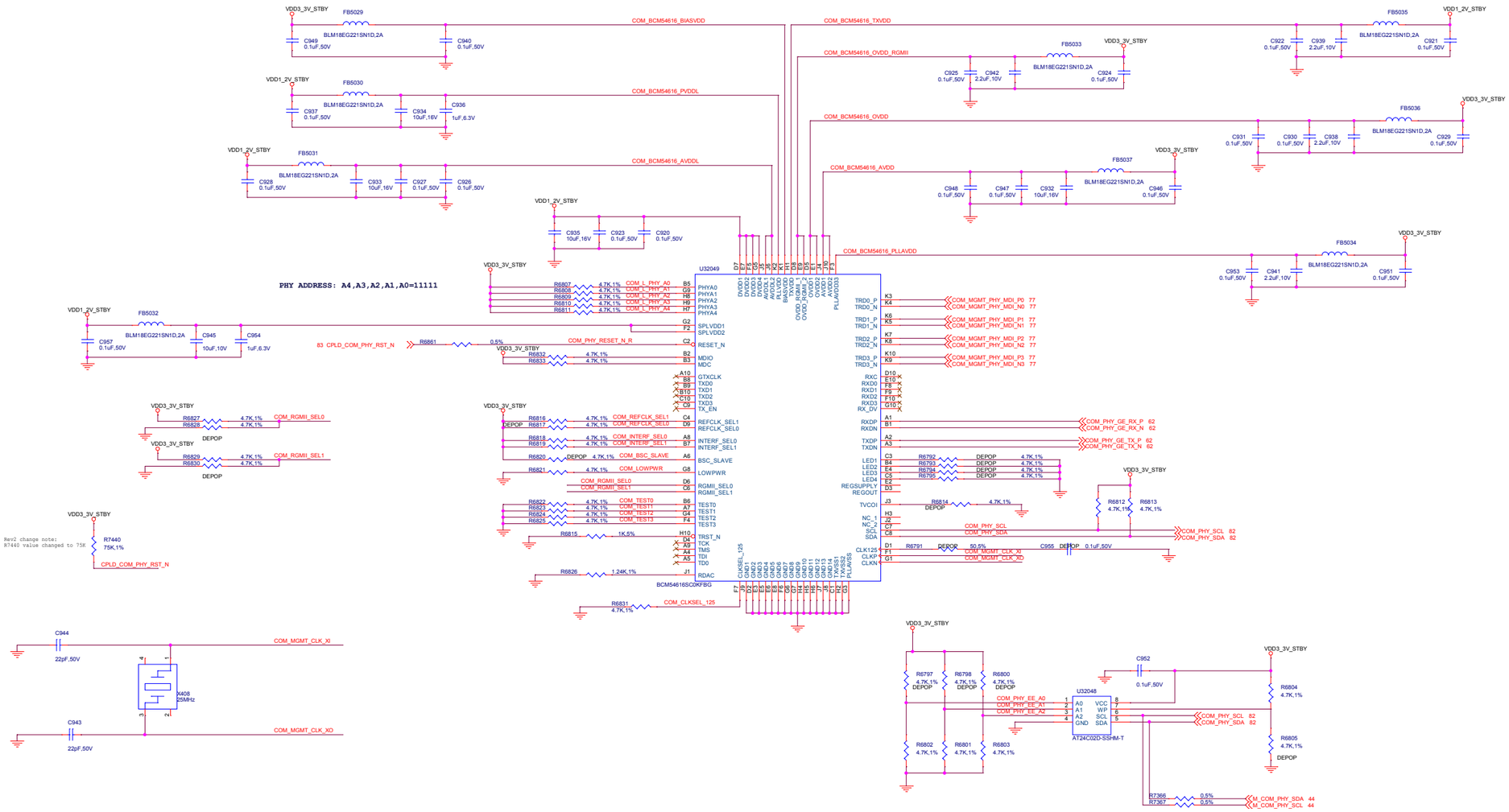

RGMII_SEL[1:0]
00 = Reserved
01 = RGMII (2.5V)
10 = RGMII (1.8V)
*11 = RGMII (3.3V)

REFCLK_SEL [1:0]
00 = Select differential clock input
01 = Select single-ended CMOS
*10 = Select XTAL input
11 = Not allowed

INTERF_SEL [1:0]
00 = RGMII-Copper (Copper mode)
01 = RGMII-Fiber (Fiber mode)
10 = SGMII-Copper (SGMII mode)
*11 = Serdes-Copper (Media Converter mode)

COM PHY

CAVIUM

Title	WEDGE100C	
Size D	Document Number 80-00010-03	Rev 2.0
Date: Thursday, December 22, 2016	Sheet 82 of 84	

3.3V to 1.8V Level Shifters

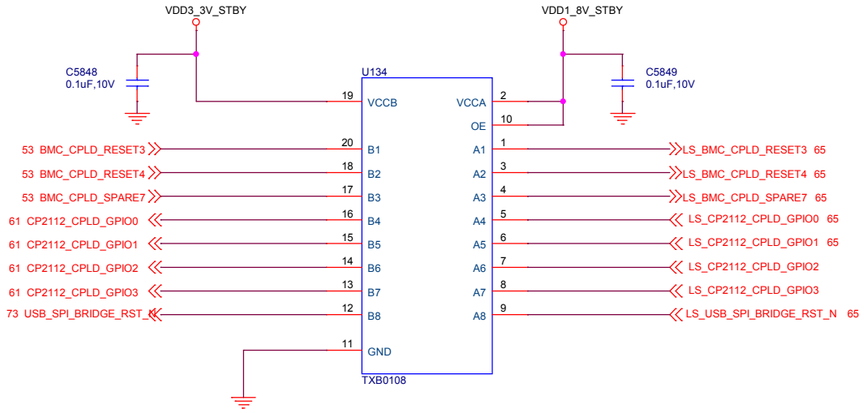

VCCA</=VCCB

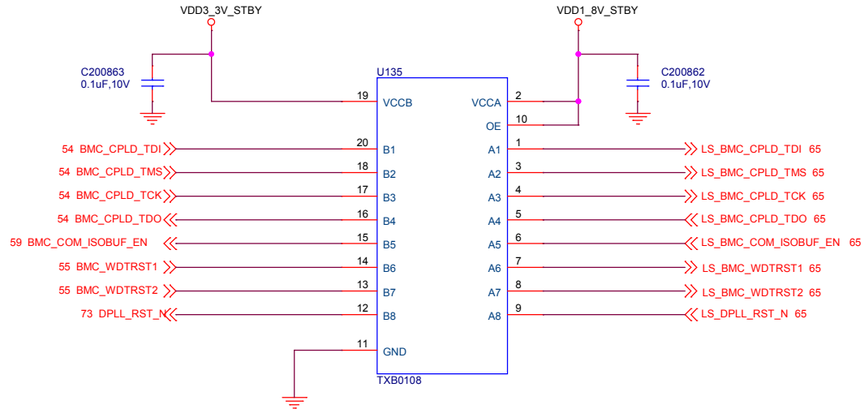

VCCA</=VCCB

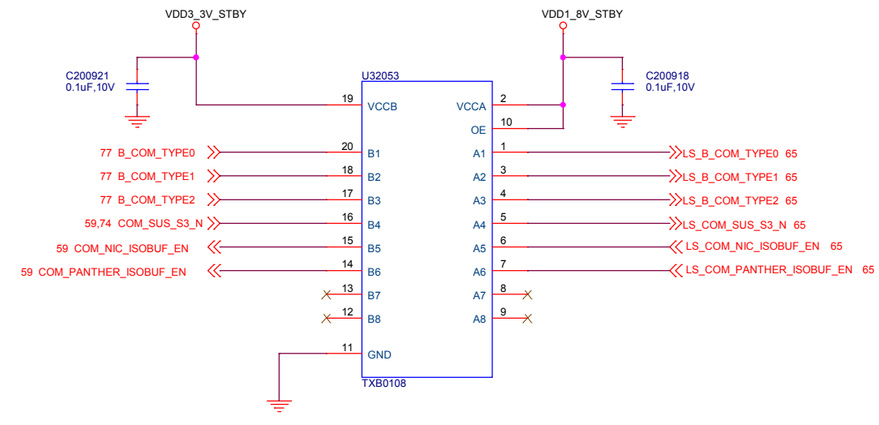

VCCA</=VCCB

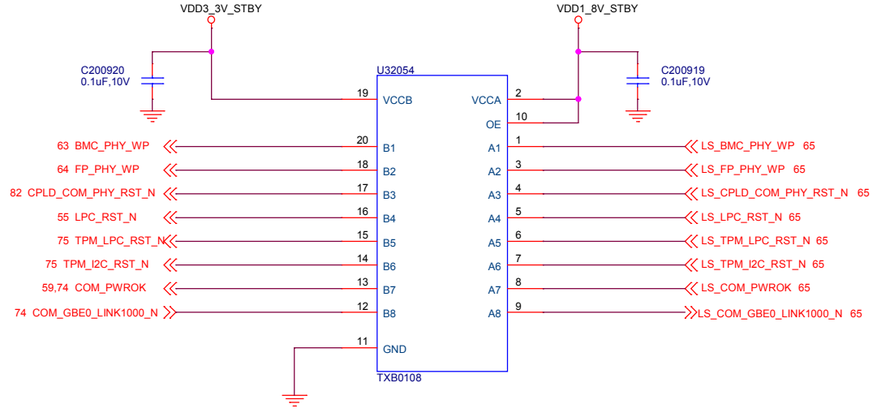

VCCA</=VCCB

CAVIUM		
Title: WEDGE100C		
Size: C	Document Number: 80-00010-03	Rev: 2.0
Date: Thursday, December 22, 2016	Sheet 83 of 84	

Sl no	Changes	Page No.	REV
1	Deleted SMAs J4217,J4218,J4219,J4220,J4221,J4222,J8005,J8006	15,35	Rev1
2	SW1 part number changed to DNHF-04F-T-V from Dawning	17	Rev1
3	Changed C4015,C4016,C4017,C4018,C4019,C8355,C8356,C8357,C8358,C8359,C8360 C8361,C8362,C8363,C8364 with EEF-HX0E331R4 part from Panasonic	19	Rev1
4	Level Translator VCCA should be less than or equal to VCCB, to achieve this U180,U134,U135,U32053,U32054 schematics updated	65,83	Rev2
5	Resistor R1244 value changed to 1K	17	Rev2
6	Resistor R8197,1K newly added	14	Rev2
7	Resistors R4331,R5681,R6666,R6855,R7318,R7322,R7413,R7440,R7447 value changed to 75K	55,59,63,64,74,75,82	Rev2

CHANGE TRACKER

CAVIUM

Title: WEDGE100C

Size: C | Document Number: 80-00010-03 | Rev: 2.0

Date: Thursday, December 22, 2016 | Sheet 84 of 84