Specification for approval

緯穎料號
Wiwynn Part No:40.64W12.001
Description:MYLAR EJECTOR HU230

廠商型號
Vendor Model No:DZ-14-6.5
Description:MYLAR背膠Φ14*Φ6.5

Issued Date: 2012.12.13
Approved Date: 2012.12.13

Approved by (Wiwynn)	Approved by (vendor)	Prepared by (vendor)
林晃業	盛德竹科技股份有限公司 101.12.13 對外發行章	韓慶福
2012.12.13		2012.12.13

ITEM	PART NO.	PART NAME	RAW MTL COLOR	ARTWORK	MATERIAL	FINISH PROCESS	FINISH COLOR
	40.64W12.001	MYLAR EJECTOR HU230			PC 1860		

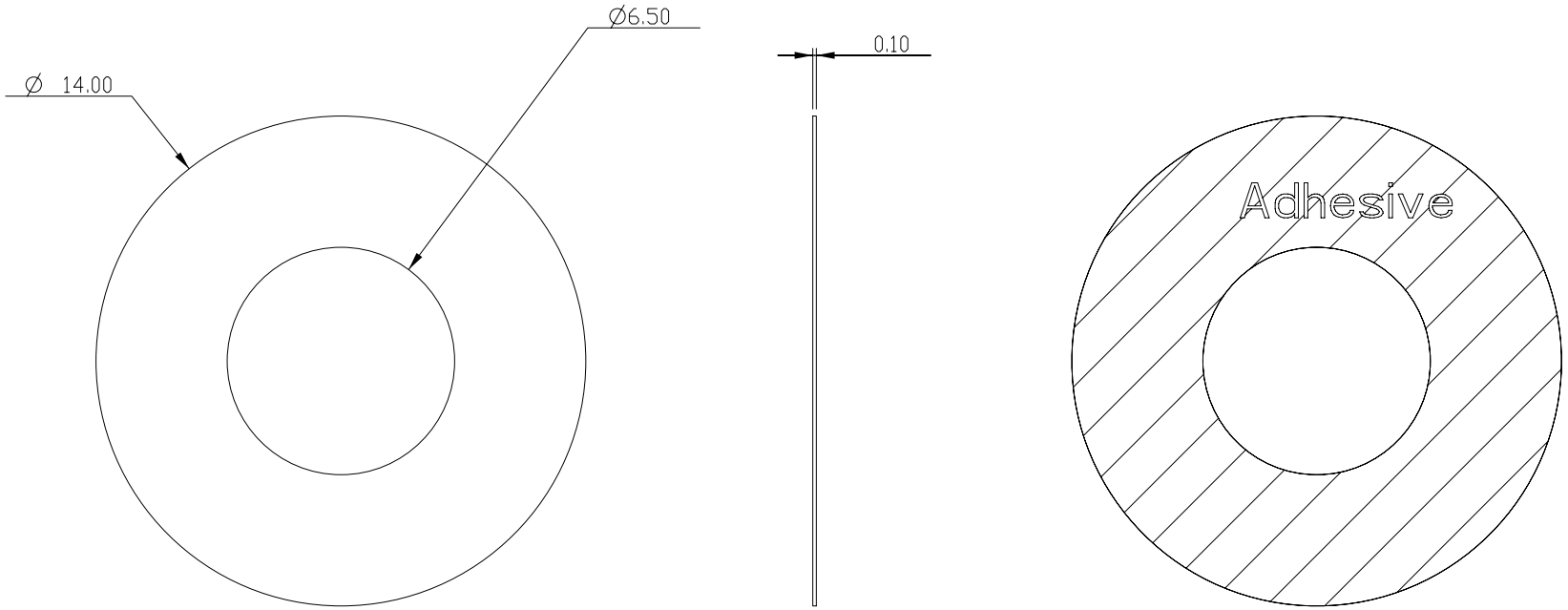

SCALE 5.000

0.1mm thickness with 3M 467MP adhesive layer backside

TOL ± / RANGE	M1	M2	S1	S2	P1	P2	C	URS
0~6	0.05	0.10	0.15	0.20	0.05	0.10	0.50	
6~30	0.10	0.20	0.15	0.25	0.10	0.15	1.00	
30~120	0.15	0.25	0.20	0.30	0.20	0.40	2.00	
120~300	0.15	0.30	0.25	0.45	0.40	0.80	3.00	
300~600	0.20	0.50	0.40	0.60	0.60	1.20	3.00	
600~1200	0.30	0.80	0.70	1.10	0.80	1.50	4.00	
ANG. TOL ±	1°							

MODEL	KNOX		NAME MYLAR EJECTOR HU230		
DRN	Arge Lin	11/2 2012	MATERIAL	PC 1860	N/A
DSN	Arge Lin	11/2 2012	FINISH		
CKD	CH Hsieh	11/2 2012			
APPD	CH Hsieh	11/2 2012			

Wiwynn Corporation

REV.	DESCRIPTION	SIGN	DATE

DIM IN	mm	DO NOT SCALE DWG	
SHEET	1	OF	1
DRAWING NO.	CD 40.64W12.0X1		

FAI Data Sheet

Drawing Number:	40.64W12.001	Supplier :	TEX-CHU	Date:	2012.12.13
Part Name:	MYLAR EJECTOR HU230	Submission No :		Cavity / Tool # :	
Revision:		Material Spec :	KLX FRPC-1860B+3M467MP	Inspector:	伍麗瓊
New:		Revised:	林晃業	Resubmission:	

Drawing Specifications						Inspection Results							Inspection Analysis				Inspection Method	Supplier Remarks	Engineering Disposition
						Sample Number			Deviation from Center			Mean	% Tolerance		Acc/Rej				
Item	Location	Nominal	Center	U deviation	L deviation	1	2	3	1	2	3		Upper	Lower	High	Low			
1		14.00	14.00	0.25	-0.25	14.15	14.09	13.92	0.15	0.09	-0.08	14.05	60%	32%			P		
2		6.50	6.50	0.25	-0.25	6.55	6.61	6.44	0.05	0.11	-0.06	6.53	44%	24%			P		
3		0.10	0.10	0.05	-0.05	0.10	0.10	0.10	0.00	0.00	0.00	0.10	0%	0%			C		

Generated by Foxit PDF Creator © Foxit Software
http://www.foxitsoftware.com For evaluation only.

KLX FRPC-1860、1860B 薄膜物性表

特　性 Property	项　　目 Item	测试方法 Test Method	单位 Unit	测试值 Standard Value
物理性能 Physical Performance	密度 Density	ASTM D792	g／cm^3	1.22
	吸水率,24hrs Absorption Rate,24hrs	ASTM D570	%	＜0.35
机械性能 Mechanical Performance	拉伸强度 Tensile Strength	ASTM D882 ISO527	psi MPa	7500 52
	断裂伸长率 Tensile Elongation at Break	ASTM D882	%	100
	冲击强度 Impact Strength(0.75mm)	ASTM D3029 ISO 6603-1	ft-lb J	11 28
	撕裂强度 Tear Strength propagation	ASTM D1922	g／mil	＞30
热性能 Thermal Performance	维卡软化点 Vicat Softening Temperature	ASTM D1525	℃	135
	热收缩率（135℃） Shrinkage at 135℃	ASTM D1204	%	≤1.0
电气性能 Electrical Performance	介电强度 Dielectric Strength（0.25mm）	ASTM D149	V／mil	1350
	表面电阻 Volume Resistivity 25℃,50%RH	ASTM D257	Ω	$>1.0\times10^{15}$
	体积电阻率 Volume Resistivity 25℃,50%RH	ASTM D257	Ω·cm	$>1.0\times10^{16}$

注：以上各项数据通过标准测试方法而获得的代表性数据，但是其数值不能在不稳定用途中作为性能的保证。

Note: The above figures are typical values obtained under standard methods and should not be construed as guaranteed data under unsteady application conditions.

QMFZ2.E315185
Plastics - Component

Additional information regarding this certification can be found in UL's iQ Family of Databases (iq.ul.com).
NEW -- for additional information concerning the individual material, click on the material designation.

Page Bottom

Plastics - Component

See General Information for Plastics - Component

CHENGDU KANGLONGXIN PLASTICS CO LTD E315185
1002, FLAT C, SHOU ZUO BLDG
48 SEC 4 RENMIN NAN RD
CHENGDU, SICHUAN 610041 CHINA

Material Dsg	Color	Min. Thk mm	Flame Class	HWI	HAI	RTI Elec	RTI Mech Imp	RTI Mech Str	HVTR	D495	C7I
Polycarbonate (PC), furnished as film.											
KLX FRPC-870B, KLX FRPC-870BF, KLX FRPC-870BH, KLX FRPC-870BFH, KLX FRPC-83B, KLX FRPC-83,KLX FRPC-F70, KLX FRPC-700B, KLX FRPC-700BF, KLX FRPC-60, KLX FRPC-60H, KLX FRPC-63,KLX FRPC-63H, KLX FRPC-65, KLX FRPC-65H											
	NC, BK	0.12	VTM-0	-	-	80	80	80			
		0.24	VTM-0	-	-	80	80	80			
		0.25	V-0	-	-	80	80	80			
		1.8-1.98	V-0	-	-	80	80	80			
Polycarbonate (PC), furnished as pellets.											
H KLX FRPC-1860, H KLX FRPC-1860B, H KLX FRPC-1860-83, H KLX FRPC-1860-83B, H KLX FRPC-1860-1, H KLX FRPC-1860B-1, H KLX FEPC-1860-NTC, H KLX FRPC-1860B-NTC, H KLX FRPC-1860B-3, H KLX FRPC-1860-3, H KLX FRPC-1870B-K, H KLX FRPC-1860B-HY, H KLX FRPC-1860-HY, H KLX FRPC-1860B-K, H KLX FRPC-1860-K, H KLX FRPC-1860W											
	NC, BK	0.05	VTM-0	-	-	80	80	80			
		0.1-0.11	VTM-0	-	-	80	80	80			
KLX FRPC-1860, KLX FRPC-1860B, KLX FRPC-1860-83, KLX FRPC-1860-83B, KLX FRPC-1860-1, KLX FRPC-1860-NTC, KLX FRPC-1860B-NTC, KLX FRPC-1860B-3, KLX FRPC-1870B-K, KLX FRPC-1860B-HY, KLX FRPC-1860-HY, KLX FRPC-1860B-K, KLX FRPC-1860-K, KLX FRPC-1860W											
	NC, BK	0.125-0.193	VTM-0	-	-	80	80	80			
		0.26-2.0	V-0	-	-	80	80	80			
KLX PC-811A, KLX PC-813A, KLX PC-813AF, KLX PC-812A, KLX PC-815A, KLX PC-816A, KLX PC-832B, KLX PC-835B, KLX PC-835BG, KLX PC-863B, KLX PC-832BF, KLX PC-835BF											
	NC	0.125-0.135	VTM-2	-	-	80	80	80			
		2.0-2.2	V-2	-	-	80	80	80			
Polycarbonate (PC), furnished as pellets, sheets..											
KLX FRPC-1870B	BK	0.125-0.174	VTM-0	-	-	80	80	80			
		0.175-0.239	VTM-0	-	-	80	80	80			
		0.24	V-0	-	-	80	80	80			
		1.7	V-0	-	-	80	80	80			

Marking: Company name and material designation on container, wrapper or finished part.

Last Updated on 2010-02-11

Questions? Notice of Disclaimer Page Top

Copyright ?2010 Underwriters Laboratories Inc.®

The appearance of a company's name or product in this database does not in itself assure that products so identified have been manufactured under UL's Follow-Up Service. Only those products bearing the UL Mark should be considered to be Listed and covered under UL's Follow-Up Service. Always look for the Mark on the product.

UL permits the reproduction of the material contained in the Online Certification Directory subject to the following conditions: 1. The Guide Information, Designs and/or Listings (files) must be presented in their entirety and in a non-misleading manner, without any manipulation of the data (or drawings). 2. The statement "Reprinted from the Online Certifications Directory with permission from Underwriters Laboratories Inc." must appear adjacent to the extracted material. In addition, the reprinted material must include a copyright notice in the following format: "Copyright © 2010 Underwriters Laboratories Inc.®"

SCOTCH 467MP, 468MP 薄膜雙面膠

產品構造：

離型紙：58 磅多層塗佈牛皮紙（0.102mm）。
膠　系：#200MP 高效能壓克力膠。
（467MP 膠厚 0.05mm，468MP 膠厚 0.127mm）

應用範圍：

銘版，鑲飾品，裝飾片及彩色薄片貼合用。

產品特點：

- 膠面塗佈極爲均勻，特別適用於塑膠薄片之貼合。
- 有極佳之凝聚力，減少一般無基材雙面膠邊緣溢膠之缺點。
- 耐溫性佳，爲金屬銘版之最佳貼合用雙面膠。
- 有佳之黏性及良好的耐候特性。
- #467MP 膠厚 0.050mm，適用於較光滑之表面。
- #468MP 膠厚 0.127mm，適用於咬花或較粗糙之表面。

產品性質及效能：

1. 黏著力：200MP 高效能壓克力膠，其黏著力會隨時間及溫度之增加而愈來愈強。
2. 抗溼性：於 38℃及 100%相對溼度環境下 7 天，依然有極高之黏性。
3. 抗紫外線特性：在美國 FLORIDA 州強烈陽光下測試一年無不良影響。
4. 耐水性：將此雙面膠浸於 65℃之水中 100 小時，其黏性反而增加。

5. 溫度循環測試：
   在下列之溫度下循環五次，測得其黏結性將會增加
   30 分鐘　121℃
   15 分鐘　22℃
   31 分鐘－29℃
   15 分鐘　22℃
6. 化學阻抗性：
   於多數化學溶劑的測試中，均不影響其黏性，如石油、JP-4 油精、酸性溶劑、油脂、三氯乙烯、煤油、烴化及脂肪質之溶劑等。
7. 耐熱性:
   200MP 膠系短期可承受 204℃數小時，長期下並能承受 149℃之高溫。
8. 產品壽命：
   於 22℃及 50%相對溼度之庫存條件下，其膠性可確保一年之壽命。

膠系特性：

測試方法	467MP	468MP
***ASTM D903**		
180 度剝離力－305mm/分鐘（20 分鐘） 0.025mm 厚 PET 貼合於不銹鋼	59 牛頓/100 毫米	96 牛頓/100 毫米
***3M 測試**		
90 度剝離力－305mm/分鐘（72 小時/長期） 0.194mm 鋁貼合於不同表面金屬（不銹鋼）	119/232 牛頓/100 毫米	234/368 牛頓/100 毫米
高能量表面 （PC, PU, PET, PVC）	107/112 牛頓/100 毫米	154/152 牛頓/100 毫米
低能量表面 （PP, PE, PS）	使用 9471，9491	使用 9472，9492

UL Online Certifications Directory

QOQW2.MH17478

Polymeric Adhesive Systems, Electrical Equipment - Component

Page Bottom

Polymeric Adhesive Systems, Electrical Equipment - Component

See General Information for Polymeric Adhesive Systems, Electrical Equipment - Component

3M COMPANY MH17478
INDUSTRIAL ADHESIVES & TAPES DIV
3M CENTER
BLDG 230-2S-29
ST PAUL, MN 55144 USA

Product Dsg	Surface	Min Temp Rating C	Max Temp Rating C
3M VHB Double sided adhesive foam tapes, suitable for indoor or outdoor applications.			
4433, 4434	Stainless Steel, Nickel, Copper, Aluminum, Brass, Glass	-35	90
4615	Aluminum, Galvanized steel, Enameled steel, Stainless steel, Glass/Epoxy	-35	110
	Polycarbonate, PBT	-35	90
	ABS, PVC	-35	75
4646, 4611, 4655	Stainless Steel, Aluminum, Galvanized steel, Glass,	-35	110

	Glass/Epoxy, Phenolic		
	Nylon, Polycarbonate	-35	90
	ABS, Rigid PVC	-35	75
4922	ABS, Polycarbonate, Polyamide	-35	90
	Phenolic, Aluminum, Galvanized steel, Alkyd enamel	-35	110
	Unplasticized Polyvinyl Chloride	-35	75
4945	ABS, Polycarbonate, Polyamide, Stainless Steel, Acrylic/Polyurethane paint, Polyester paint	-35	90
	Phenolic, Aluminum, Galvanized steel, Alkyd enamel	-35	110
	Unplasticized Polyvinyl Chloride	-35	75
	Aluminum	-35	90
	Phenolic, Enameled steel	-35	110
5925, 5952, 5962	Polycarbonate, Aluminum, Acrylic/Polyurethane paint, Galvanized steel, Polyester paint	-35	90
	Rigid PVC	-35	75
5952	Acrylic, Cellulose Acetate Butyrate	-35	90
3M VHB Adhesive transfer tapes, suitable for indoor or outdoor applications.			
9460PC, F-9460PC, 9469PC, F-9469PC, 9473PC, F-9473PC	ABS, Polycarbonate, Galvanized steel	-35	90
	Aluminum, Phenolic, Enameled steel, Stainless steel, Ceramic, Glass/Epoxy	-35	110
	Rigid Polyvinyl Chloride	-35	75
9469PC, F-9469PC	Nickel plated iron	-35	110
3M VHB Double sided adhesive foam tapes, suitable for indoor or outdoor applications.			
4914, 4920, 4930, 4950	Aluminum, Galvanized steel, Enameled steel, Stainless steel, Ceramic, Glass/Epoxy	-35	110
	ABS, Polycarbonate, Rigid PVC	-35	75

	PBT, Acrylic	-35	90
4905, 4910	Polycarbonate, Aluminum, Acrylic/Polyurethane paint	-35	90
4919F, 4919P, 4926, 4936, 4936F, 4941, 4941F, 4946, 4947F, 4947P, 4956, 4956F, 4979, 4979F	Ceramic	-35	110
	Aluminium, Galvanized steel, Stainless steel, Enameled steel, Nickel Coated ABS, Glass (with or without Silane Coating), PVC, Glass/Epoxy, PBT, Polycarbonate, Acrylic/Polyurethane paint, Polyester paint	-35	90
	ABS	-35	75
		-35	90
4991	Polycarbonate, Aluminum, Acrylic/Polyurethane paint, Polyester paint	-35	90
3M Adhesive transfer tapes, suitable for indoor or outdoor applications.			
7965MP, 8153LE	Urethane Paint, Polyester Paint, Acrylic Paint	-35	60
467 MP, 467 MPF, 468 MP, 468 MPF, 9667 MP, 9668 MP, 7952 MP, 7955 MP, 7962 MP, 9172 MP, 9172 PT, 9185 MP, 9679 MP, EAD217, 7945 MP, 7953 MP, 7956 MP, 7956 MWS, 7956 WDL, 7957 MP, 7959 MP, 7961 MP, 9045 MP, 9056 MP, 9057 MP, 9057 MPW, 9059 MP, 9061 MP, 7966 MWS and 7966 WDL,	Polycarbonate, Acrylic/Urethane coated Polycarbonate	-35	85
467 MP, 467 MPF, 9667 MP, 7952 MP, 7962 MP, 9172 MP, 9172 PT, 9679 MP, EAD217, 7945 MP, 7953 MP, 7956 MP, 7956 MWS, 7956 WDL, 7957 MP, 7959 MP, 7961 MP, 9045 MP, 9056 MP, 9057 MP, 9057 MPW, 9059 MP and 9061 MP	Aluminum, Stainless Steel, Galvanized Steel, Aluminum coated Steel	-35	85

8153LE	Urethane Paint, Polyester Paint, Acrylic Paint	-35	60
9482PC, 9485PC	Polycarbonate, Aluminum, Galvanized steel, Enameled steel, Stainless steel, Ceramic, Glass/Epoxy, PBT	-35	90
	Rigid PVC, ABS	-35	75
3M Thermally Conductive Adhesive Tape, suitable for indoor or outdoor applications.			
9882, 9885, 9890	Glass/Epoxy	-35	110
	Aluminum , Stainless steel	-35	90
8805, 8810, 8815	Anodized Aluminum, Glass/Epoxy	-35	100
3M Adhesive heat cured transfer tapes, suitable for indoor or outdoor applications.			
9245	Ceramic Coated Glass, Stainless Steel	-35	105

Marking: Company name and product designation on carton, container, wrapper or package.

Last Updated on 2006-06-16

Questions? Notice of Disclaimer Page Top

Copyright © 2006 Underwriters Laboratories Inc.®

The appearance of a company's name or product in this database does not in itself assure that products so identified have been manufactured under UL's Follow-Up Service. Only those products bearing the UL Mark should be considered to be Listed and covered under UL's Follow-Up Service. Always look for the Mark on the product.

UL permits the reproduction of the material contained in the Online Certification Directory subject to the following conditions: 1. The Guide Information, Designs and/or Listings (files) must be presented in their entirety and in a non-misleading manner, without any manipulation of the data (or drawings). 2. The statement "Reprinted from the Online Certifications Directory with permission from Underwriters Laboratories Inc." must appear adjacent to the extracted material. In addition, the reprinted material must include a copyright notice in the following format: "Copyright © 2006 Underwriters Laboratories Inc.®"