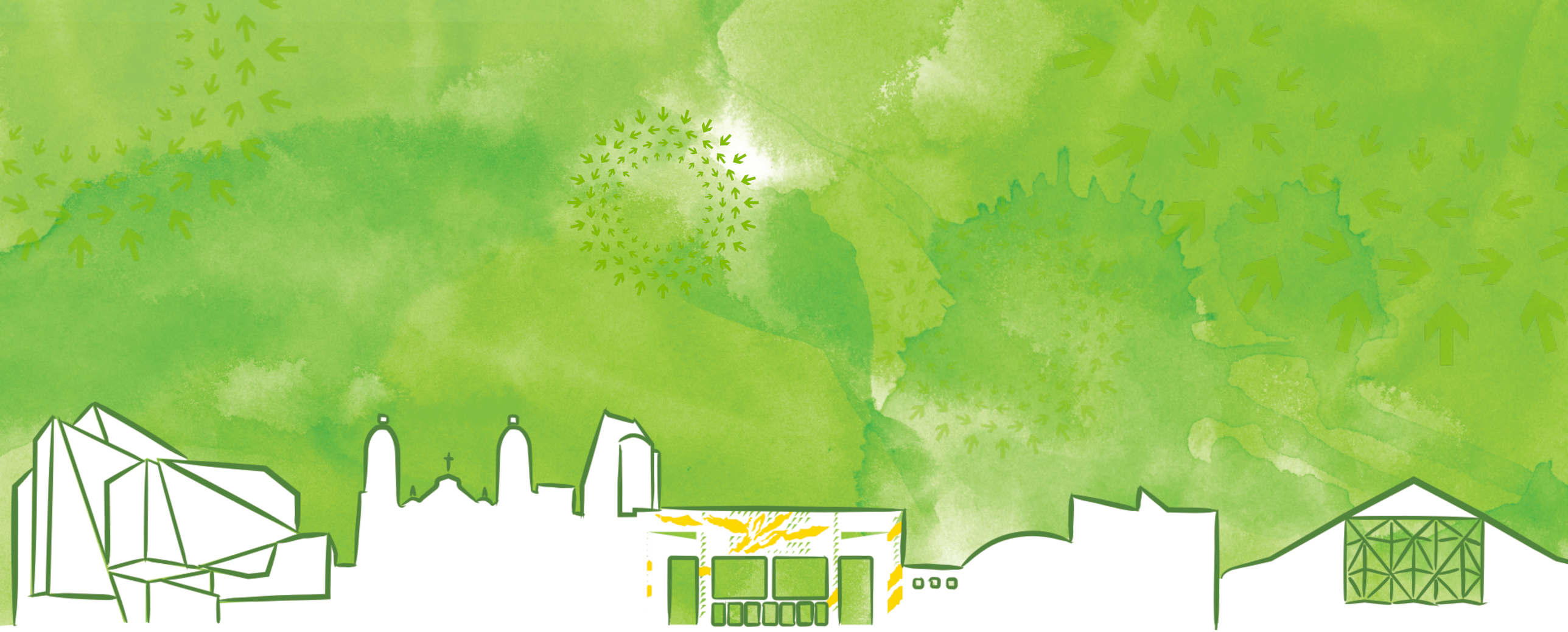

OCP Engineering Workshop 25 September 2017| Dallas, TX

OCP NIC 3.0
Connector Update

Arash Behziz / David Herring
Technologist

Straddle Mount Interconnect Sizing

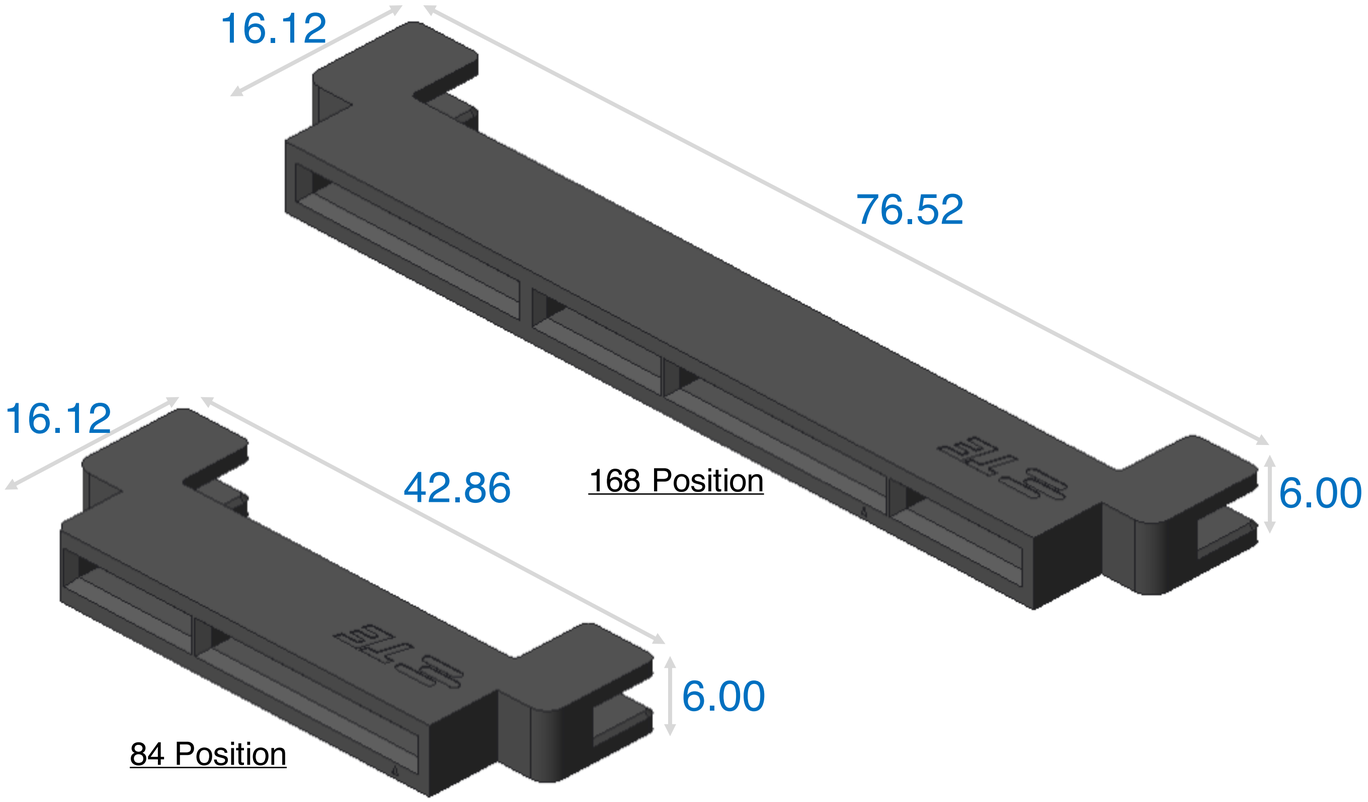

Extension to Gen-Z & EDSFF standards for SFF-TA-1002

Performance Better than or equal to Right Angle connector

Routing and design guidelines available in November. Sizing for reference only

Added guide features to allow pad alignment before solder

All dimensions shown are for reference only

Straddle Mount Footprint based on Sliver SFF-TA-1002

84 Position

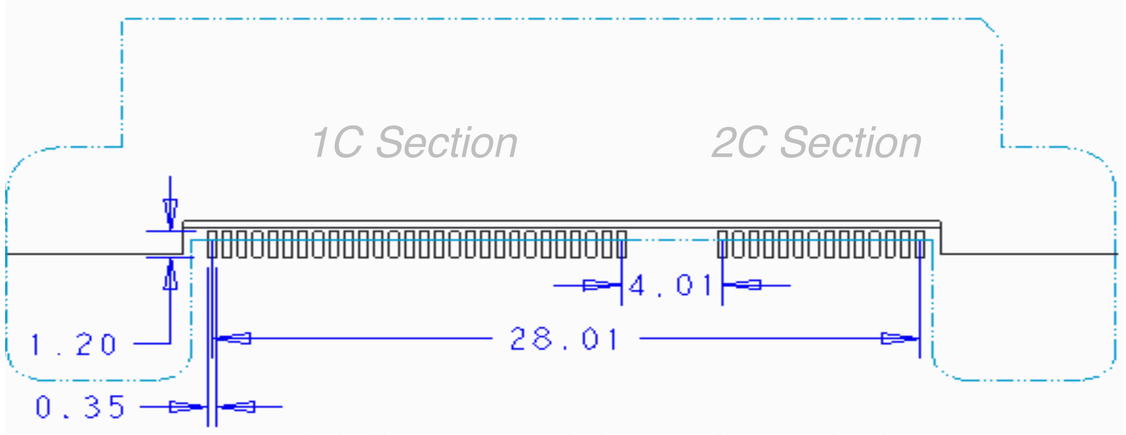

Note: Opposing row contact pads on other side of host pcb

168 Position

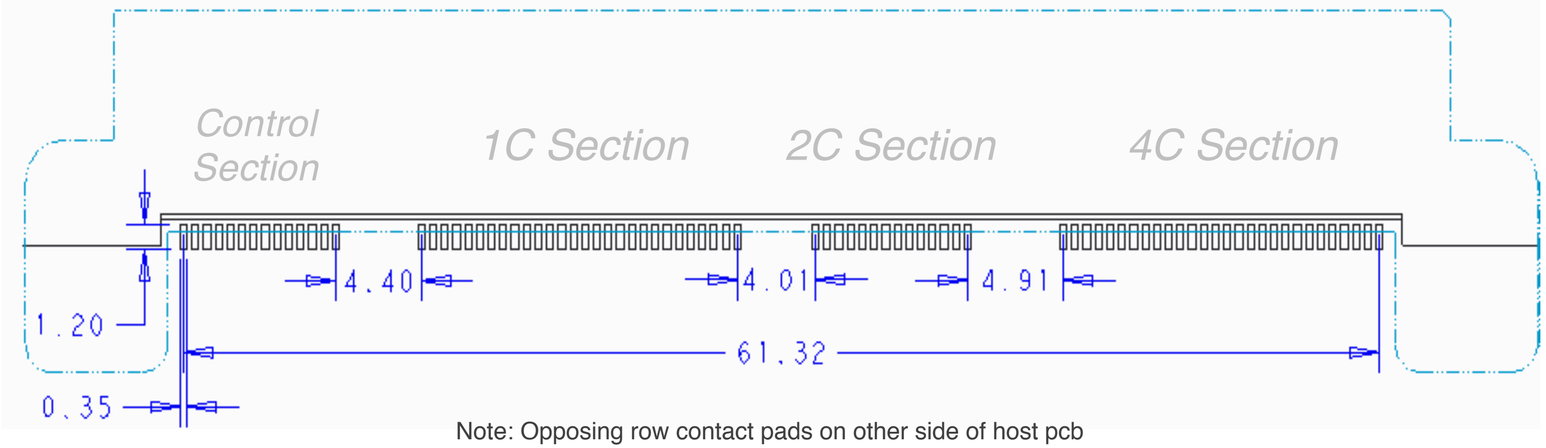

Note: Opposing row contact pads on other side of host pcb

Pad performance and design similar to SFF-TA-1002

Transition performance better than or equal to right angle connector

Footprint finalized with review by Gen-Z & OCP Community

All dimensions shown are for reference only

Supporting Multiple Host Card Thicknesses

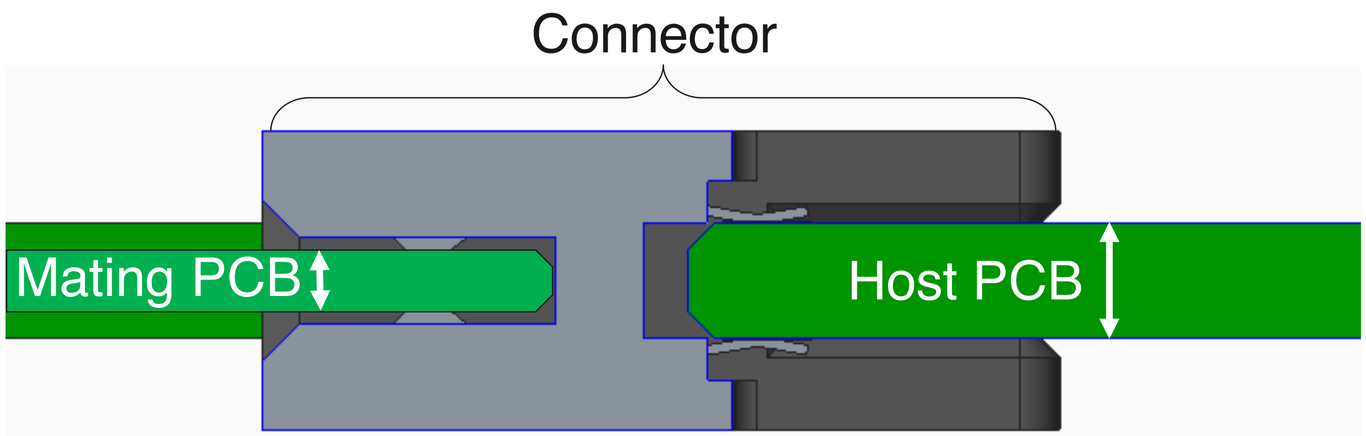

Connector	Mating PCB Thickness	Host PCB Thickness
A	.062” (1.57mm)	.062” (1.57mm)
B		.076” (1.93mm)
C		.093” (2.36mm)
D		.105” (2.67mm)

Tooling timeline based on industry volume and need

OCP NIC Pinout Proposal

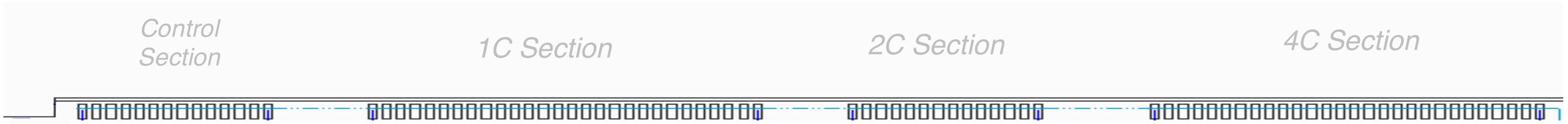

PCIe CEM + OCP

Position	Connector (lower row) Side B Signals	Connector (upper row) Side A Signals
1	12V / 12VAux	GND
2	12V / 12V Aux	GND
3	12V / 12V Aux	GND
4	PRSNTO#	NCSI_CLK
5	NCSI_CRSDV	NCSI_TXEN
6	NCSI_RXD1	NCSI_TXD1
7	NCSI_RXD0	NCSI_TXD0
8	GND	GND
9	SMCLK2	NCSI_ARB_IN
10	SMDAT2	NCSI_ARB_OUT
11	GND	GND
12	REFCLKn2	REFCLKn3
13	REFCLKp2	REFCLKp3
14	GND	GND
	Key	Key
1	12V	GND
2	12V	GND
3	12V	GND
4	12V	GND
5	12V	GND
6	12V	GND
7	Wake#	SMCLK
8	PWR_BREAK	SMDAT
9	Res	SMRST#/RFU
10	PERSTO#	Res
11	3.3VAux	CLKREQ
12	PWRDIS	PRSNT1#
13	GND	GND
14	REFCLKn0	REFCLKn1
15	REFCLKp0	REFCLKp1
16	GND	GND
17	PERn0	PETn0
18	PERp0	PETp0
19	GND	GND
20	PERn1	PETn1
21	PERp1	PETp1
22	GND	GND
23	PERn2	PETn2
24	PERp2	PETp2
25	GND	GND
26	PERn3	PETn3
27	PERp3	PETp3
28	GND	GND
	Key	Key
29	GND	GND
30	PERn4	PETn4
31	PERp4	PETp4
32	GND	GND
33	PERn5	PETn5
34	PERp5	PETp5
35	GND	GND
36	PERn6	PETn6
37	PERp6	PETp6
38	GND	GND
39	PERn7	PETn7
40	PERp7	PETp7
41	GND	GND
42	PRSNT2#	Res
	Key	Key
43	GND	GND
44	PERn8	PETn8
45	PERp8	PETp8
46	GND	GND
47	PERn9	PETn9
48	PERp9	PETp9
49	GND	GND
50	PERn10	PETn10
51	PERp10	PETp10
52	GND	GND
53	PERn11	PETn11
54	PERp11	PETp11
55	GND	GND
56	PERn12	PETn12
57	PERp12	PETp12
58	GND	GND
59	PERn13	PETn13
60	PERp13	PETp13
61	GND	GND
62	PERn14	PETn14
63	PERp14	PETp14
64	GND	GND
65	PERn15	PETn15
66	PERp15	PETp15
67	GND	GND
68	Res	Res
69	Res	Res
70	PRSNT2#	Res

OCP x 168 pin

OCP x 84 pin

Right Angle Interconnect Sizing

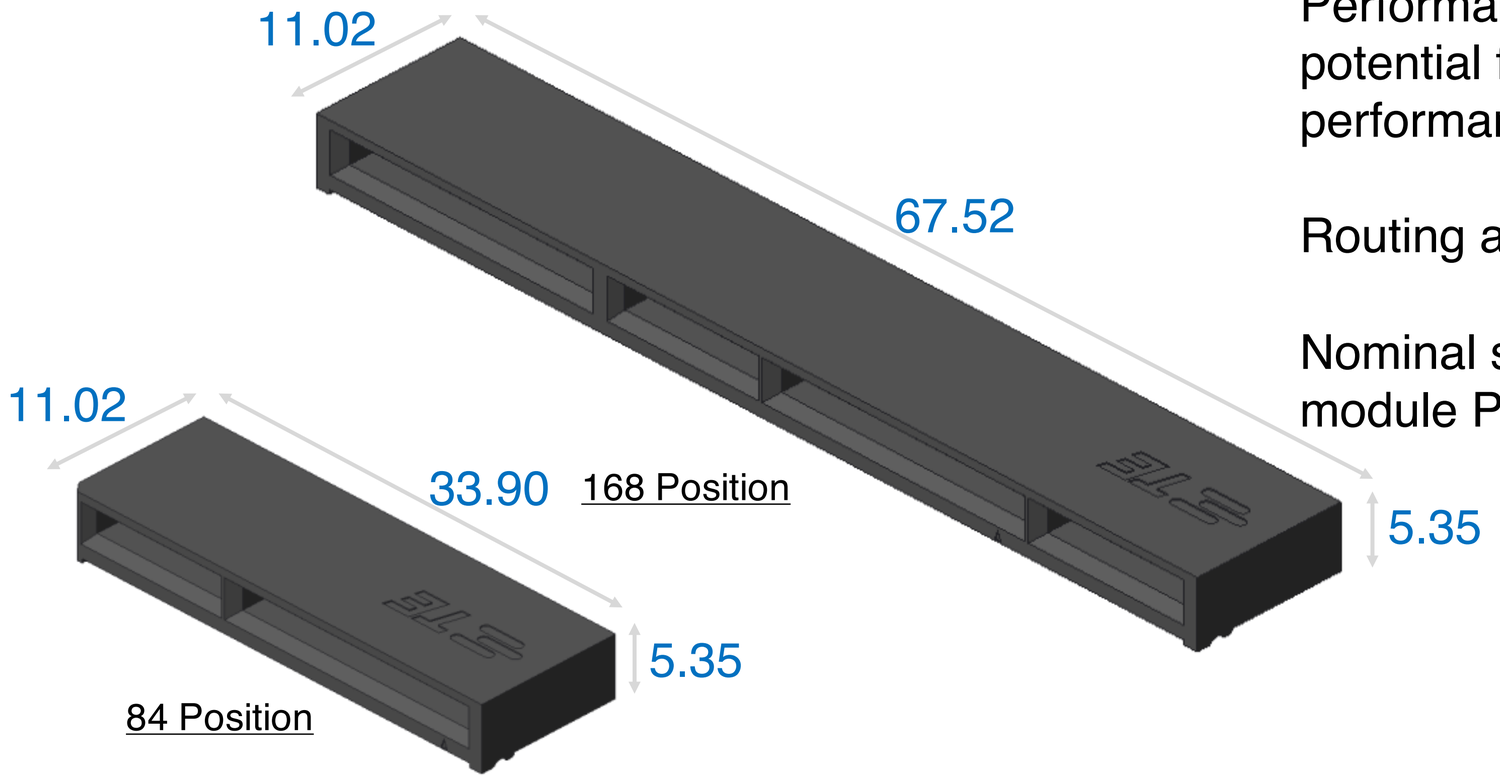

Exact match of SFF-TA-1002 standard for EDSFF & Gen-Z

Performance capable to 56 gbps PAM4 with potential for 112gbps PAM4. Demonstrated performance Now.

Routing and design guidelines available Now.

Nominal space between host and bottom of module PCB 2.25mm

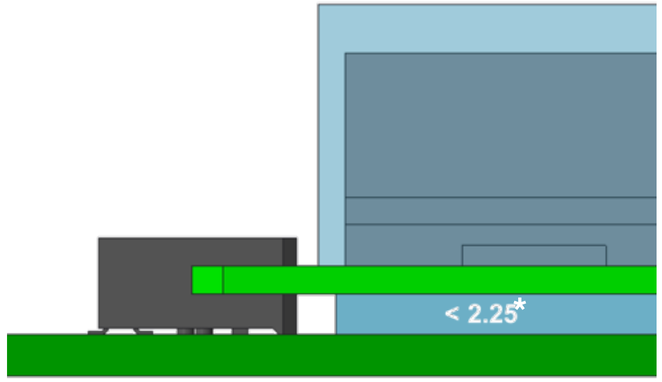

* Dimension, not maximum component height

All dimensions shown are for reference only

Other Form Factors & Secondary Component Heights

PCIe CEM

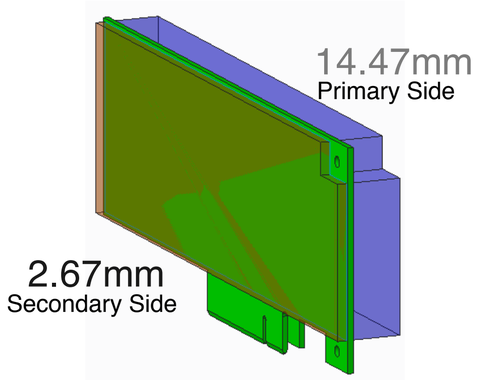

OCP Mezz 2.0

Some area on OCP Mezz 2.0 defines max component height of 2.0mm

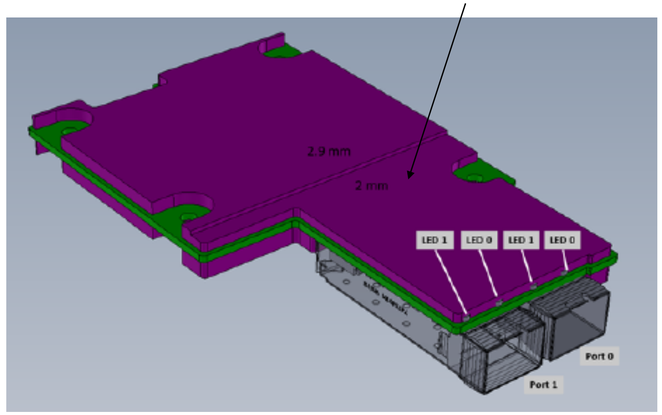

Figure 22: Single/Dual SFP+/SFP28 port Mezzanine card port and LED location
OCP_Mezz 2.0_rev1.00_2015b_pub_release.pdf

QSFP

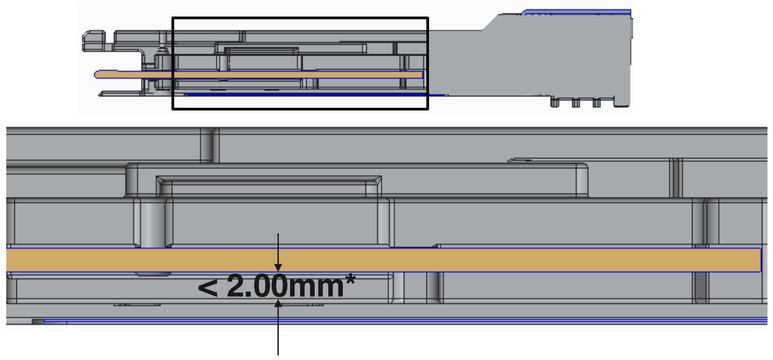

* Dimension, not maximum component height

M.2

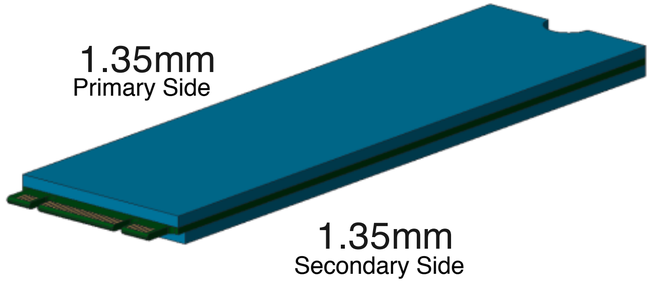

On Board Optics Consortium as reference

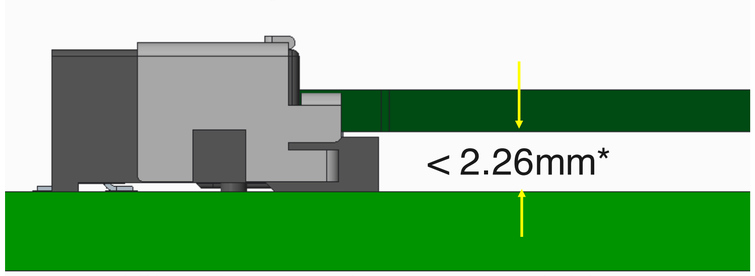

* Dimension, not maximum component height

Right Angle Footprint Exact use of SFF-TA-1002 with Additional 28 Position Control Section

84 Position

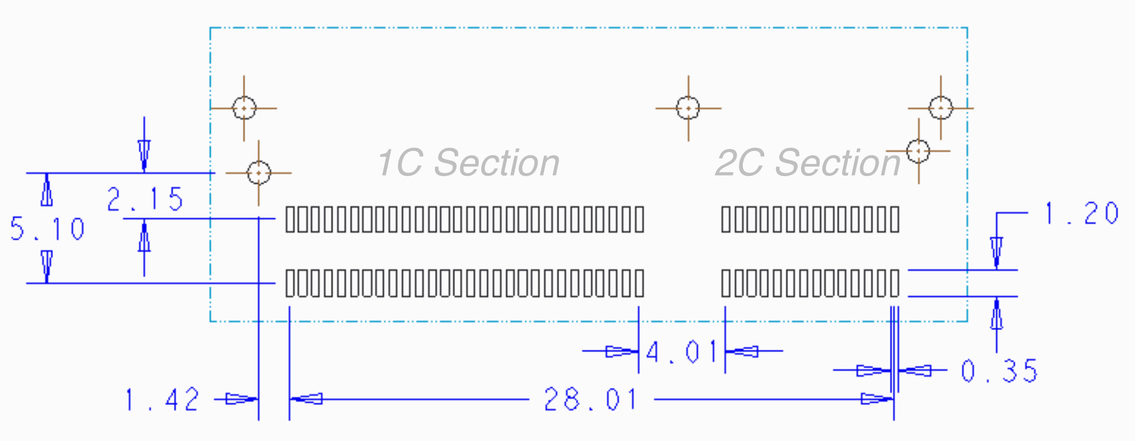

84 position is exact 2C (x8) implementation

168 position is extension of 140 position 4C (x16) with a re-use of the 28 position section.

168 Position

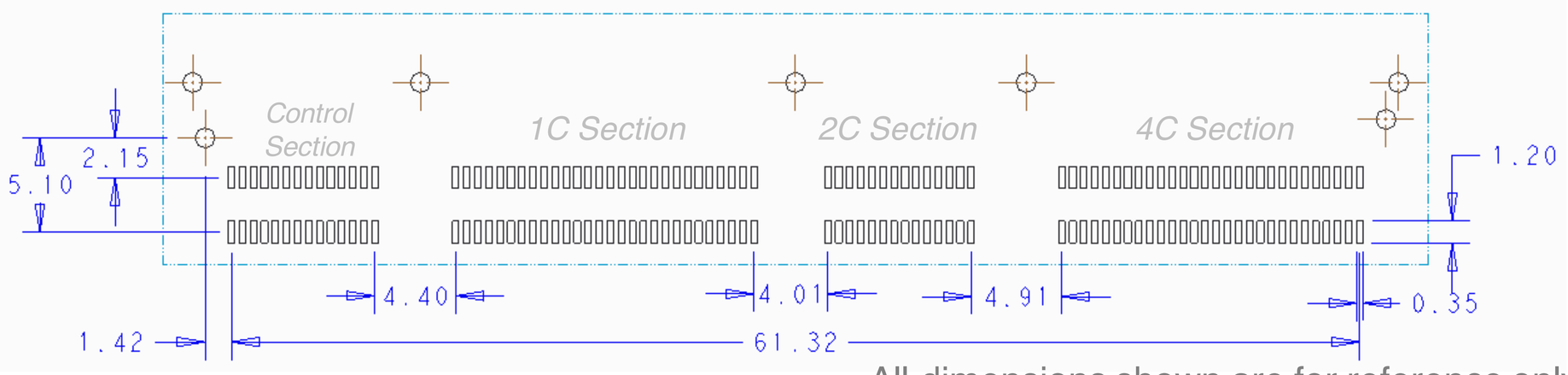

All dimensions shown are for reference only

Right Angle Interconnect Electrical Performance

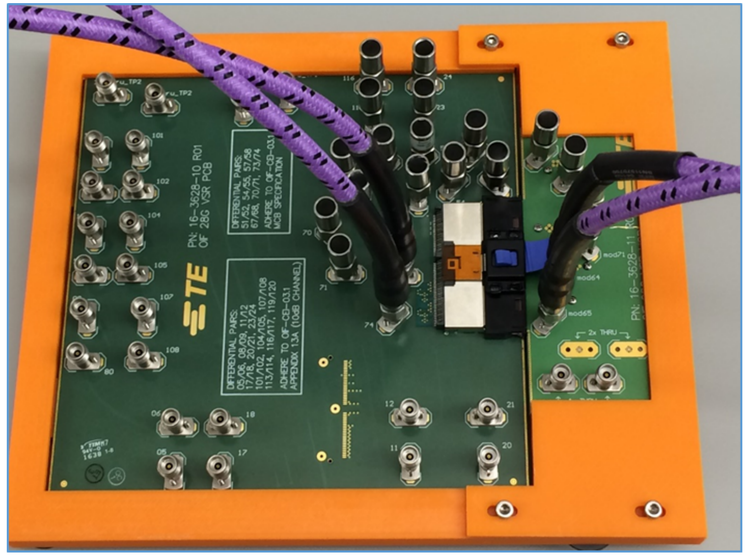

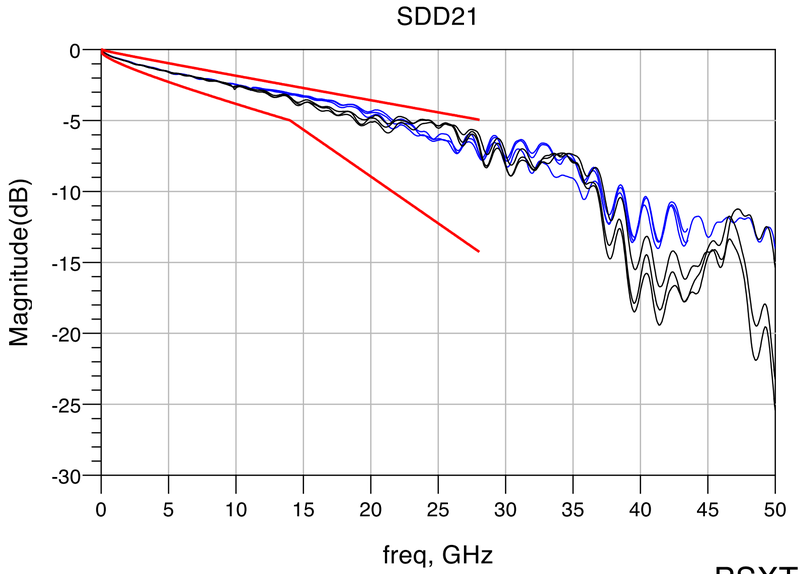

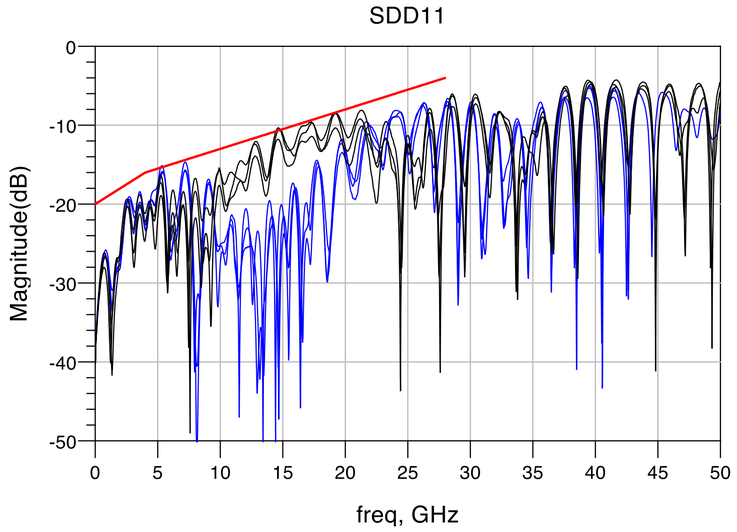

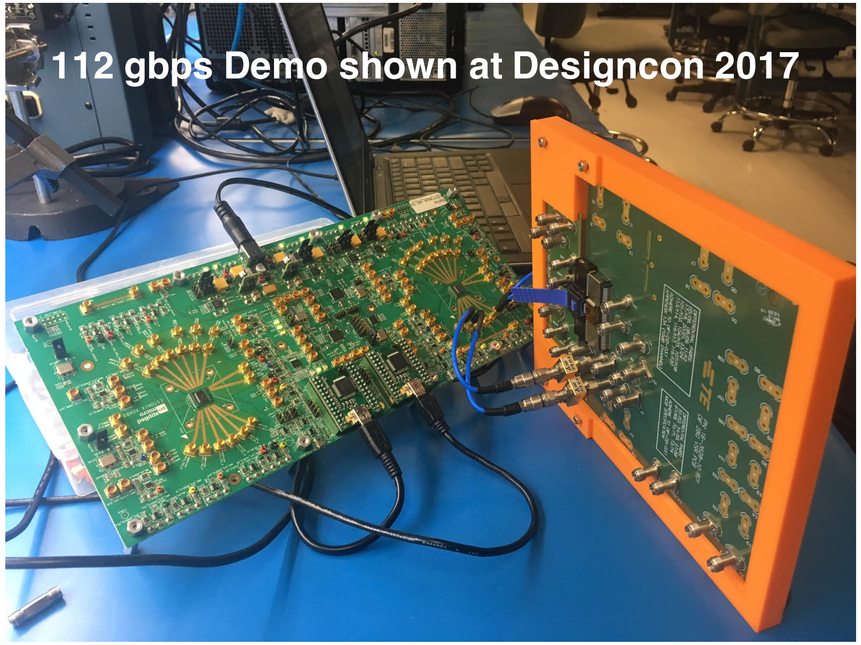

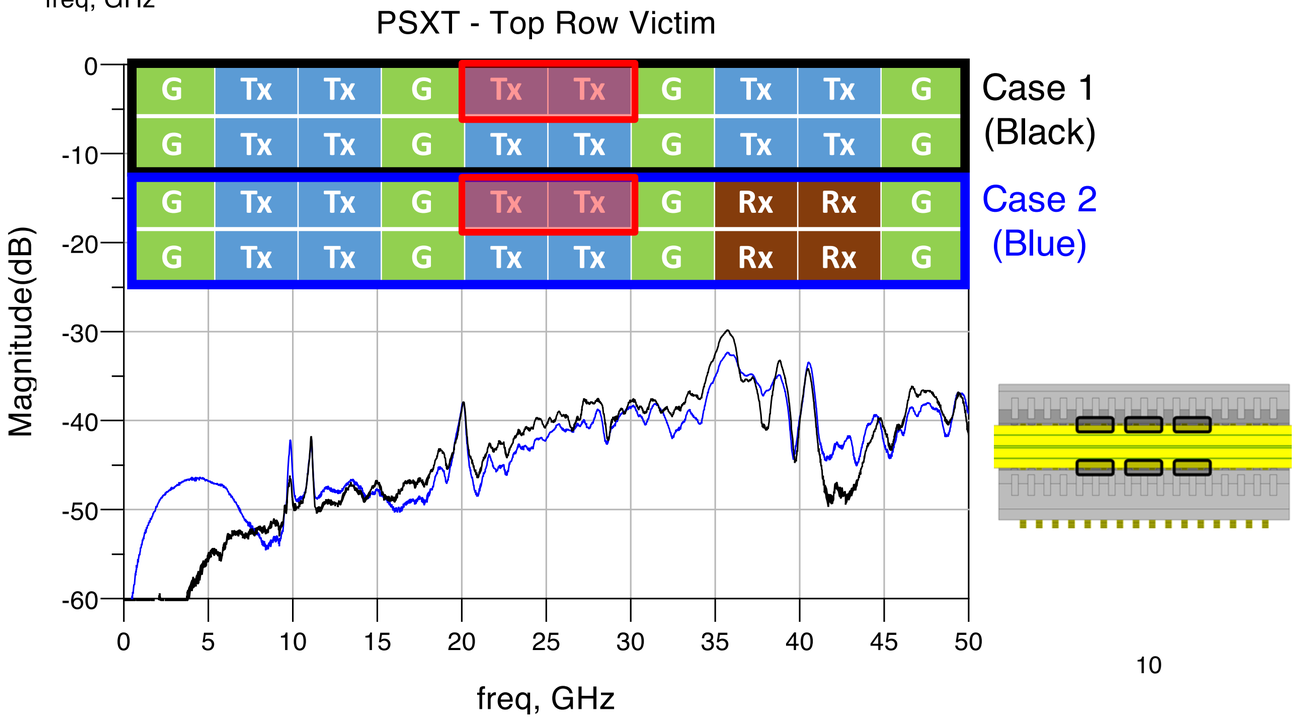

OPEN
Compute Project