KAO DATA

Kao Data KLONDC1

OCP READY™ Facility Recognition Program for Colo Solution Providers

March 6th, 2019Date

KAO DATA

Schneider Electric

OPEN™ COMMUNITY

linx

KLONDC1 – KLONDC4 Overview

- New UK London Data Center market entrant
- Harlow – outside M25 Orbital Motorway
- DC1 - Launched Q1/2018
- 52 week delivery schedule
- Total Campus capacity circa 36MW
- 4 x Data Centers (8.8MW each)
- 4 x Suites per DC (2.2 MW each)
- Total Campus IT (White Space) circa 13,550 m2
- 16 x 850 m2 Suites on Campus

KLONDC1 – KLONDC4 Overview

- **Facility Features**
  - 24/7/365 Security, Access Control & CCTV
  - Indirect Adiabatic & Evaporative cooling
  - Column free IT Space – concrete slab floor
  - Concurrently maintainable
  - Ultra Efficient – PUE < 1.2
  - Hot Aisle Containment
  - Overhead busway & cabling – front & top access

KLONDC1 – DC Access

- Secure interlocked delivery bay
- Hydraulic scissor lift – side vehicle offloading
- Offloading pad – tail-lift trucks
- Sized to take small batches of pre-built racks < 25 up to 900kg on standard pallet truck
- Pathway to Technology Suites – up to 58U high racks, 600 or 800mm x 1200mm on truck
- De-Box room for rack acclimatization
- Goods lift – 2,500 kg – 3m clear
- Minimal ramps – 1 per floor @ 1/12 gradient

KLONDC1 – IT White Space

- Column free – no constraints
- Hot Aisle Containment – IT Technology Cells
  - 13 Cells per Technology Suite
  - 34 x 600mm or 26 x 800mm cabinets
  - Maximum 442 cabinets per Technology Suite
- Concrete Slab Floor – 15kN/msq
- Overhead Busway Distribution
- OCP philosophy – cabinet/rack front and top access
- Hot air return ceiling plenum height – 3.65m

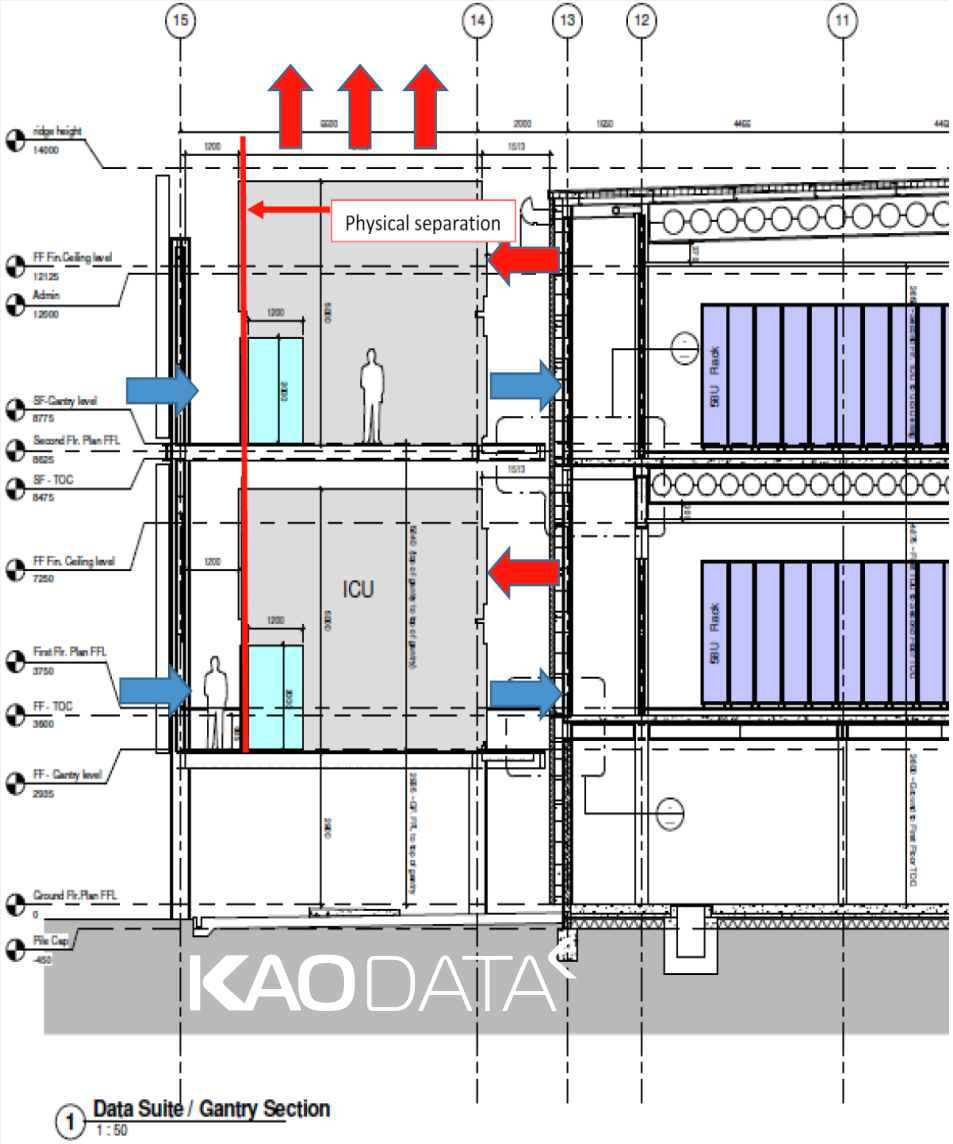

KLONDC1 – Cooling

- Indirect Adiabatic & Evaporative, side mounted external cooling units
- Air flow management
  - Room void delivery – low velocity & impedance
  - Hot ceiling plenum return
- Average 5kW over 442 racks
- 10 to 20kW rack power is achievable – subject to rack design

KLONDC1 – DC Cooling Performance

- Air flow management
  - IT Cells or Pods – front to back airflow – designed for ≥ 12 Degrees Centigrade
- Compressor free cooling – ultra efficient
- DC Facility Cooling Efficiency - Flat PUE - load independent!
- Percentage IT Load vs. PUE
  - 25% ~ 1.23
  - 50% ~ 1.14
  - 75% ~ 1.16
  - 100% ~ 1.21

KLONDC1 DC Cooling Performance

KAO DATA LONDON ONE - 8.8MW CAMPUS DATA CENTRE BUILDING CUSTOMER OPEX COST ADVANTAGE (REDUCED POWER USAGE)

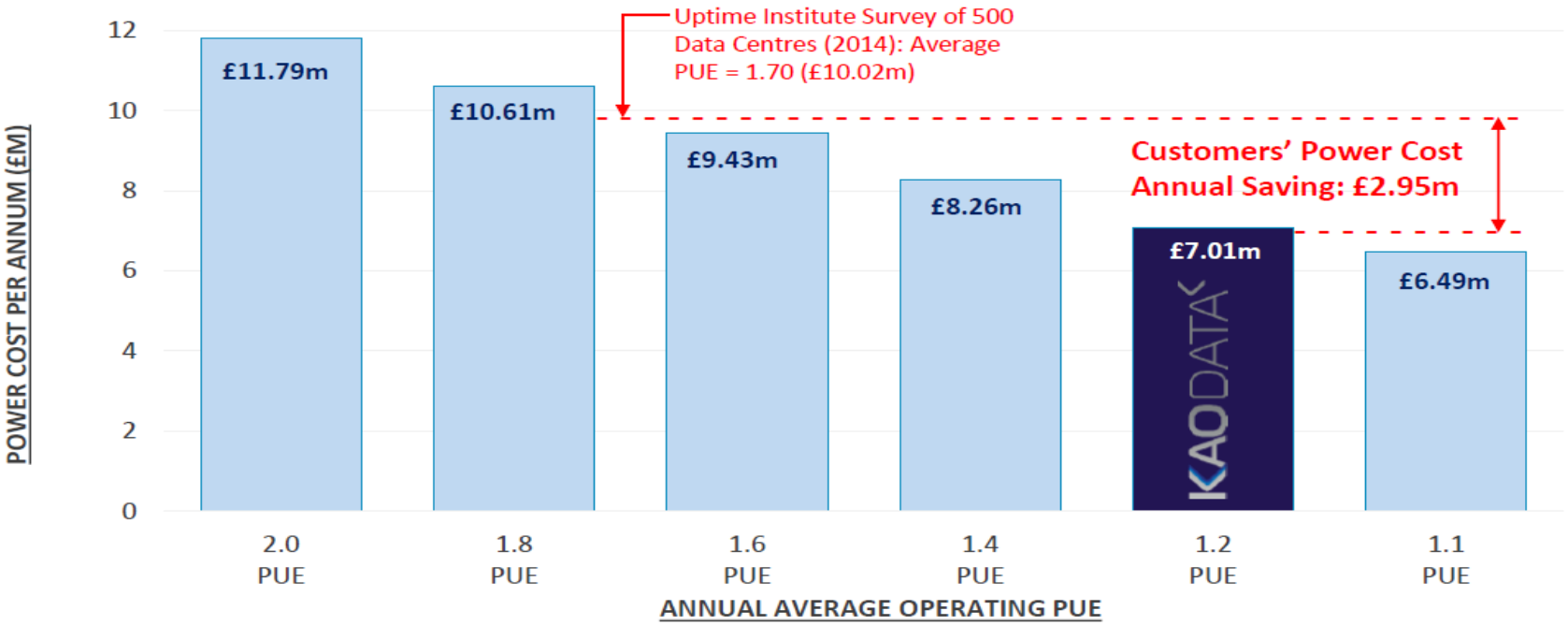

ANALYSIS BASED ON:

- OPERATING 8760 HOURS PER YEAR
- 8800kW CAMPUS DATA CENTRE BUILDING AT 85% UTILISATION
- £0.09kWh POWER UTILITY COST

NOTES:

- UPTIME INSTITUTE SURVEY DATA: 1.89 (2011)1.80 (2012), 1.67 (2013), 1.70 (2014)

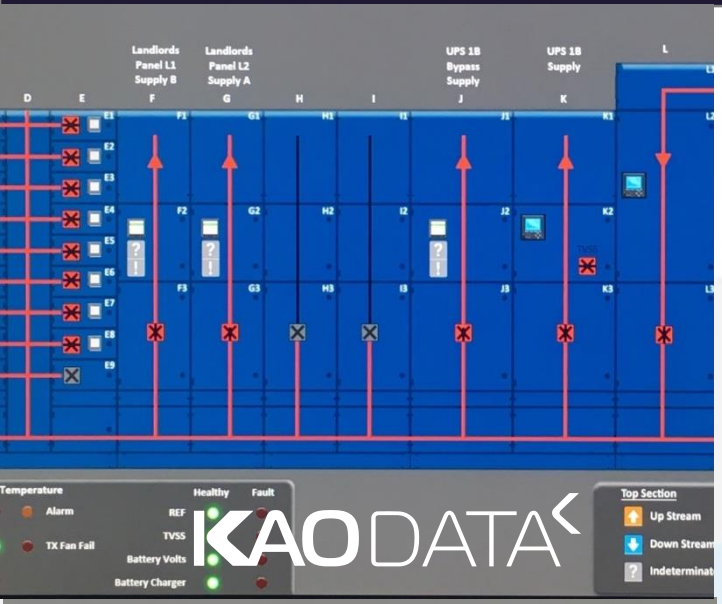

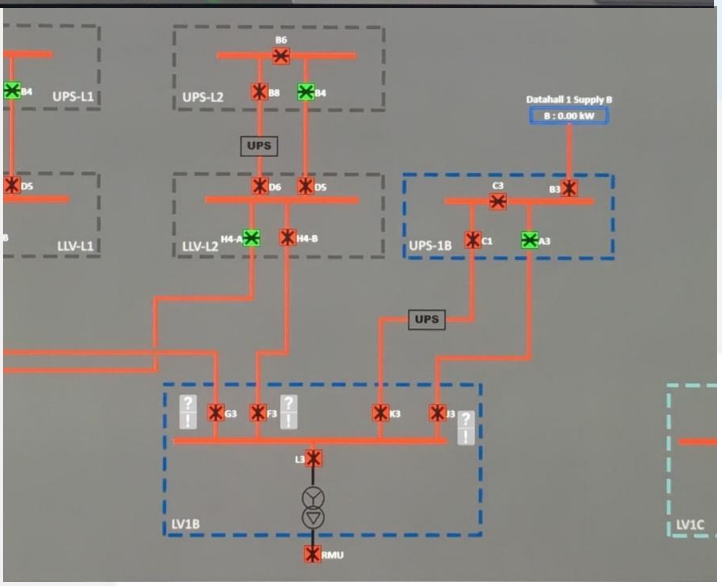

KLONDC1 – DC Power Options

- Distributed Redundant N+1 LV architecture – direct bus bar feeds from UPS rooms – reduced losses
- Overhead busway, with flexible IEC 60309 power supply options – 400/230 V ac, 16, 32, 63 Amp.
- Dual ‘2N’ power to racks
- Concurrent maintainability
- Generator backed raw mains or UPS options
- Critical Load Power Monitoring Systems
- Flexible UPS options – architecture and redundancy
- Central UPS vs. distributed Rack PSU & BBU

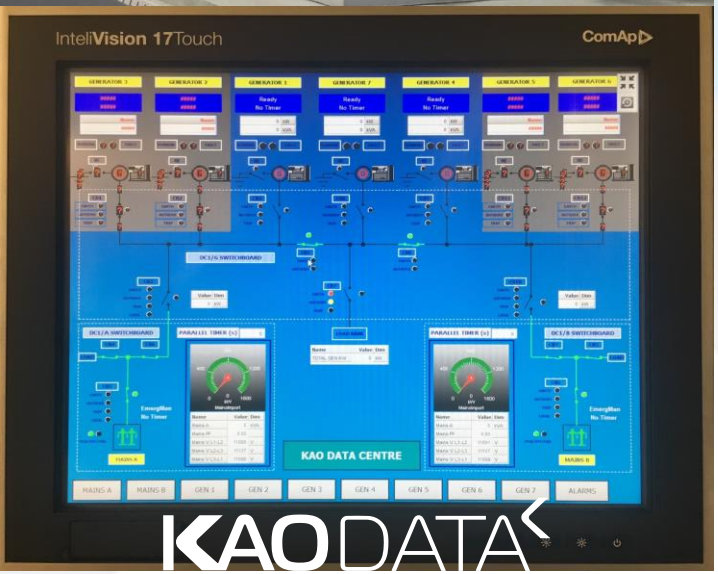

KLONDC1 – DC Back-up Power

- Centralized MV Generator back-up systems
- Per building approach – load monitoring & arbitrage
- Regular Testing
- Live building load
- Utility synchronization
- No-break return from utility outage

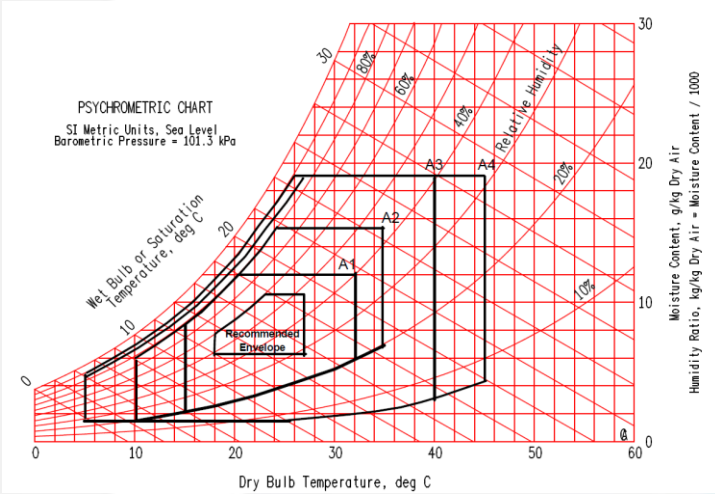

KLONDC1 – DC Monitoring & Control

- Environmental Control – drives efficiency and TCO reduction
  - ASHRAE Recommended & Allowable limits – Class A1 for equipment range
  - WUE/CUE Optimization & Monitoring – PUE < 1.2
  - Environmental monitoring – Effective SLAs
  - Recommended - 18 to 27degC [65 to 80degF] ~ 40 to 60% RH
  - Allowable - 15 to 32degC [59 to 90degF] ~ 20 to 80% RH
- Airborne contaminants – ISA 71.04, silver & copper corrosion
  - G1 – Protect warranties
  - ≥ G2 – take action!

KLONDC1 DC Facilities Operation

- Reduced operational costs – Reduced complexity & waste
  - Cooling – no mechanical refrigeration
    - environmental protection – Global Warming potential reduction
    - Reduced power consumption, smaller transformers & cable
    - Reduced carbon usage and fuel use on back-up
    - Improved sustainability
  - Increased availability – lower component and material count
    - Point of use ‘UPS’ – only support truly critical systems
    - Fewer power conversions – more reliability – less waste
    - Direct fans and air/air heat exchange (& water!) – more reliability

KLONDC1 DC Services & Features

- **Cabling**
  - Cable and fibre containment systems designed & installed per Customer specific requirements
  - Cabinets/Rack fed via cable routes - Top & Rear
- **Openness**
  - PUE published via Portal and email report
  - Facility Design Files available for Customers upon request
- **Network Availability**
  - Multiple Tier 1 Providers – OpenReach, euNetworks, CenturyLink
  - Carrier Neutral – 9 carriers, some on OpenReach dark fibre – AiNetworks, Linx, Vodafone, BT
- **Services**
  - Secure Storage Available
  - Colocation & Remote Hands Capabilities – via ServerChoice
  - ISO 9001, ISO 14001, ISO 270001 & ISO 45001

THANK YOU

Contact

- Gérard Thibault
  - CTO Kao Data | Kao Data Campus
  - t: 01279 937403
  - e: gerard.thibault@kaodata.com | w: www.kaodata.com