| REV | ECO NO | DESCRIPTION | DRAWN | APVD DATE |
|---|---|---|---|---|
| - | - | - | - | / / |
| B | - | DFM FEEDBACK CHANGES | L CANNON | 03/03/14 |
| C | - | UPDATED NOTE 1, ADDED NOTE 18 | N. TOLCHIN | 5/14/14 |

NOTES UNLESS OTHERWISE SPECIFIED:

1. INTERPRET DRAWING PER ASME Y14.100. DRAWING IS FOR INSPECTION PURPOSES ONLY. ACTUAL PART GEOMETRY IS CONTROLLED BY 3D CAD DATABASE.

2. MATERIAL: 301 STAINLESS STEEL
THICKNESS: 0.6±0.08mm
HARDNESS: 1/4-1/2 HARD
SPECIFICATION: JIS G3302
PLATING/COATING: ZCS(A)X, ZINC COATING MASS: Z08, MINIMIZED SPANGLE, SKIN PASSED, CHROMATE (ANTI-FINGER PRINT) TREATED, UNOILED

3. PART WEIGHT: (WEIGHT_GRAMS:0 GRAMS), (WEIGHT_OZ:0 OZ)

4. PART SHALL BE CLEAN AND FREE OF CONTAMINANTS, METAL FLAKES, AND OIL.

5. UNDIMENSIONED 90° BENDS SHALL BE HELD AT A TOLERANCE OF ±1°.

6. ACCESSIBLE SHARP EDGES NOT PERMITTED. BURR SHALL BE TOWARDS SURFACE INDICATED. MAX BURR SIZE TO BE 10% OF MATERIAL THICKNESS AND IN COMPLIANCE WITH UL1439 STANDARD ON ALL ACCESSIBLE EDGES.

7. REFERENCE THE LATEST REVISION OF THE FOLLOWING DOCUMENTS FOR INSPECTION AND ACCEPTANCE CRITERIA:
A. MICROSOFT METAL QUALIFICATION PROCESS (D00435)
B. MICROSOFT SHEET METAL PART WORKMANSHIP STANDARDS (D00034)
C. MICROSOFT RESTRICTED SUBSTANCES FOR HARDWARE PRODUCTS (H00594)
D. MICROSOFT RESTRICTED SUBSTANCES CONTROL SYSTEM (H00642)
E. MICROSOFT PAINTED PRODUCT WORKMANSHIP AND TEST SPECIFICATION (H00388)
F. MICROSOFT SYSTEM EMC DESIGN RULES AND GUIDELINES (D00755)
G. MICROSOFT METAL STAMPING DIE MINIMUM TOOL GUIDELINES (D02520)
H. MICROSOFT METAL STAMPING DIE MAINTENANCE GUIDELINE (D02522)

8. THE FOLLOWING INFORMATION SHALL BE MARKED IN A PERMANENT AND LEGIBLE MANNER, LOCATED WHERE INDICATED. CHARACTERS SHALL BE A MINIMUM OF 3.0mm TALL.
A. MICROSOFT PART NUMBER
B. CURRENT REVISION
C. MANUFACTURING DATE CODE (DD MMM YYYY)
D. SUPPLIER ID (SUPPLIER ID LOCATION)

9. VENDOR SHALL SUPPLY A CERTIFICATE OF REGULATORY COMPLIANCE WITH EACH SHIPMENT THAT INCLUDES THE FOLLOWING INFORMATION:
A. NAME OF THE SUPPLIER
B. PRODUCTION DATE
C. MATERIAL MANUFACTURER'S NAME OR TRADE NAME AND MATERIAL DESIGNATION
D. NAME OF THE COMPANY BUYING THE PRODUCT
E. PART NUMBER AND REVISION
F. PURCHASE ORDER NUMBER
G. SHIPMENT DATE
H. QUANTITY OF PARTS SHIPPED
I. MANUFACTURER REPRESENTATIVE'S NAME, SIGNATURE OR FUNCTION TO ATTEST TO THE ACCURACY OF THE INFORMATION.

10. PART TOOLING IS THE PROPERTY OF MICROSOFT AND SHALL BE PERMANENTLY MARKED WITH "PROPERTY OF MICROSOFT", THE PART NUMBER, AND THE TOOL ASSET NUMBER.

11. FAI IQC/OQC FIXTURES REQUIRED AND MUST BE APPROVED BY MICROSOFT ENGINEERING. FREE STATE INSPECTION CONDITIONS REQUIRED FOR FAI. ON-GOING PROCESS CONTROL INSPECTIONS SHALL BE DONE IN FREE STATE.

12. PARTS SHALL BE PACKAGED FOR SUPPLIER INTERNAL DISTRIBUTION.

13. COIN EDGES WHERE INDICATED TO REMOVE SHARP EDGES. BREAKS IN COINING FOR CARRYING WEBS REQUIRE APPROVAL OF MICROSOFT ENGINEERING.

14. BEND RADII AND RELIEFS SHALL COMPLY TO ELECTRONIC DATABASE.

15. CARRY POINTS SHALL BE RECESSED BY 0.25mm MAX. TOOLING HOLES OR OTHER DEVIATIONS REQUIRE APPROVAL BY MICROSOFT ENGINEERING.

16. TOLERANCE KEY FOR NON-DIMENSIONED ITEMS:
HOLE DIAMETER IN PUNCH DIRECTION: ±0.08
CHAMFERED HOLE DIAMETER FROM BURR SIDE: ±0.15
HOLE TO HOLE: ±0.13
HOLE TO EDGE: ±0.13
EDGE TO EDGE: ±0.13
HOLE TO BEND: ±0.13
EDGE TO BEND: ±0.21
BEND TO BEND: ±0.26
EMBOSS DEPTH: ±0.26
ANGLE: ±0.3°

17. VENDOR MODIFICATIONS OF HOLE FEATURE SIZING AND TOLERANCES FOR PRESS-IN HARDWARE IS ALLOWED FOR VENDOR-SPECIFIC HARDWARE PER MICROSOFT APPROVAL.

18. DIMENSIONS AND TOLERANCES NOT MARKED CRITICAL, TOOLING OR PROCESS SHALL BE CONSIDERED REFERENCE DIMENSIONS. ONLY CRITICAL, TOOLING AND PROCESS DIMENSIONS ARE REQUIRED TO BE COMPLIANT FOR FAI. ADDITIONAL MEAUREMENTS REQUIRED AT ENGINEERING REQUEST.

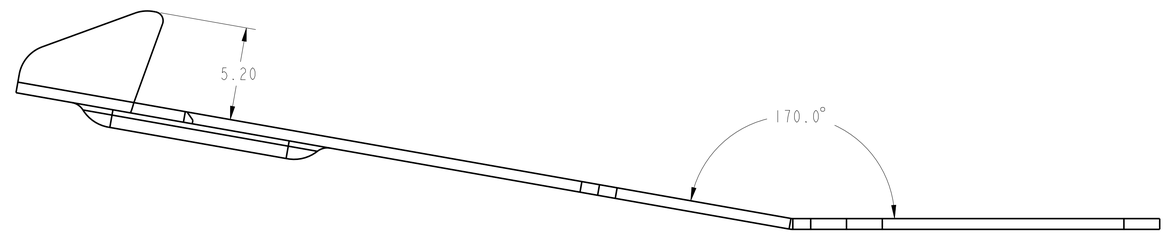


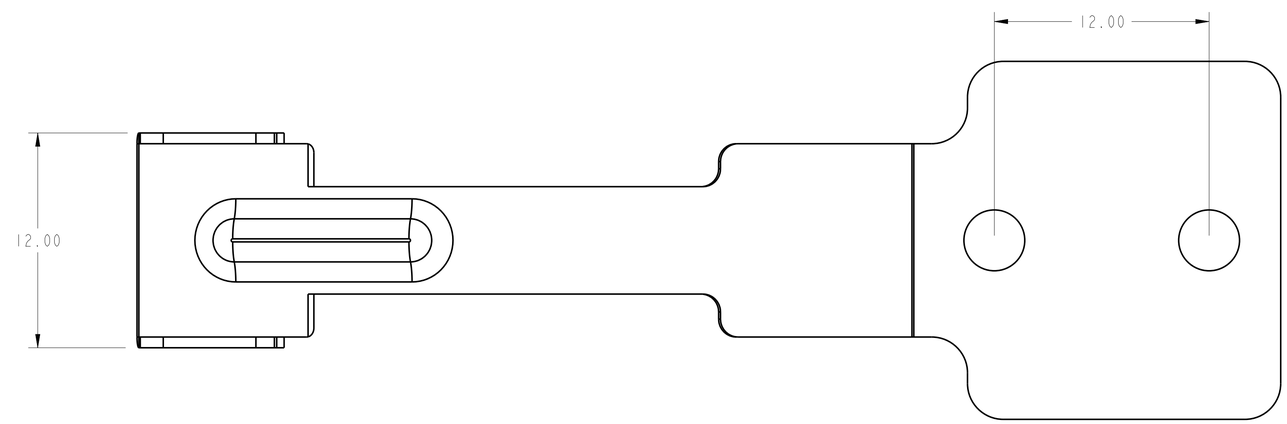


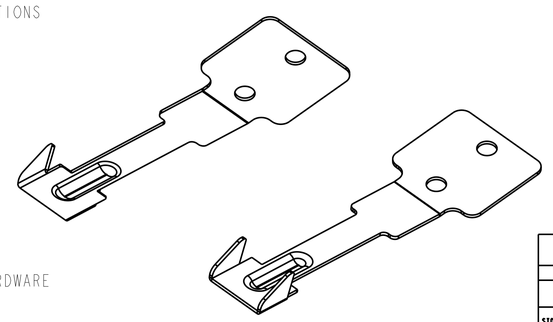

| DIMENSIONS ARE IN MILLIMETERS | | | |
|---|---|---|---|
| GENERAL TOLERANCES | | | |
| | X | X.X | X.XX |
| STD.DIM | ±0.5 | ±0.25 | ±0.15 |
| ANGLE | ±3° | ±1° | ±0.5° |
| RADIUS | ±25% | ±10% | ±5% |

| | |
|---|---|
| - | - |
| - | - |
| DOCUMENT NO | GENERAL DESCRIPTION |
| APPLICABLE SPECIFICATION TABLE | |

THIS DOCUMENT AND THE INFORMATION CONTAINED HEREIN ARE PROPRIETARY TO MICROSOFT CORPORATION AND SHALL NOT BE USED BY, OR DISCLOSED IN WHOLE OR IN PART TO ANYONE OUTSIDE OF MICROSOFT CORPORATION WITHOUT THE PRIOR WRITTEN PERMISSION OF MICROSOFT CORPORATION.

| ITEM | QTY | DESCRIPTION |
|---|---|---|

| | | |
|---|---|---|
| DRAWN BEBROIL1 | DATE 24-Mar-14 | Microsoft |
| CHECKED - | DATE - | |
| ENGINEER - | DATE 24-Mar-14 | |
| ENGINEER - | DATE - | |
| COG ENGR - | DATE - | |
| MFG ENGR - | DATE - | |
| TOOLING - | DATE - | |
| QUALITY - | DATE - | |
| RELEASED - | DATE - | |

MS PART NO: X881050-001
MS PDM VER: C.1

UNLESS OTHERWISE SPECIFIED DIMENSIONS ARE: MILLIMETERS TOLERANCES ARE:
SEE TOLERANCE BLOCK
DO NOT SCALE DRAWING

TITLE:
# LATCH, SIDE WALL

LEGEND:
★ = TOLERANCE CHAIN DIM
▣ = CRITICAL DIM
● = TOOLING DIM
△ = PROCESS DIM
(ID) = DIMENSION ID

SIZE: D

THIRD ANGLE PROJECTION

DRAWING NO: X881050
REV: C
SCALE: 2:1
SHEET: 1 OF 1