Specification for Approval

緯創料號

Wistron Part No.:23.10758.001

Description: FAN PSD1206 5P50MM SUNON 60x60x60MM KNOX

廠商型號

Vendor Model No.: PSD1206PWB1-A

P/N:(2).B4812.F.GN

Description:DC BRUSHLESS FAN

Issued Date: 2013 / 01/18

Approved Date: 2015/02/02

Approved by (Wiwynn)	Approved by (Vendor)	Prepared by (Vendor)
Lentis Pai **2015/02/02**	Eric 2013/02/07	Smart 2013/02/07

SUNON

SPECIFICATION FOR APPROVAL

CUSTOMER	: 緯穎科技服務股份有限公司
DESCRIPTION	: DC BRUSHLESS FAN
DIMENSIONS	: 60X60X60 mm
M O D E L	: PSD1206PWB1-A
P/N	: (2).B4812.F.GN
SUNON SPEC. NO.	: D06066850G-02
CUSTOMER APPROVAL NO.	:
APPROVED BY CUSTOMER (AUTHORIZED)	:

DRAWN	LiHe 01/07	CHECKED	Rachel	APPROVED	Sunny	SPEC.NO	D06066850G-02
						ISSUE DATE	12.19.2012
						EDITION	1
						REVISION DATE	01.07.2013
						E.SPEC	E11200464

建準電機工業股份有限公司
SUNONWEALTH ELECTRIC MACHINE INDUSTRY CO., LTD.
NO. 30, LN. 296, XINYA RD., QIANZHEN DIST., TEL:886-7-8135888
KAOHSIUNG CITY 80673, TAIWAN (R.O.C) FAX:886-7-8230505/8230606/8231010
URL:http://www.sunon.com E-mail: sunon@email.sunon.com.tw

I. MODEL NUMBERING SYSTEM

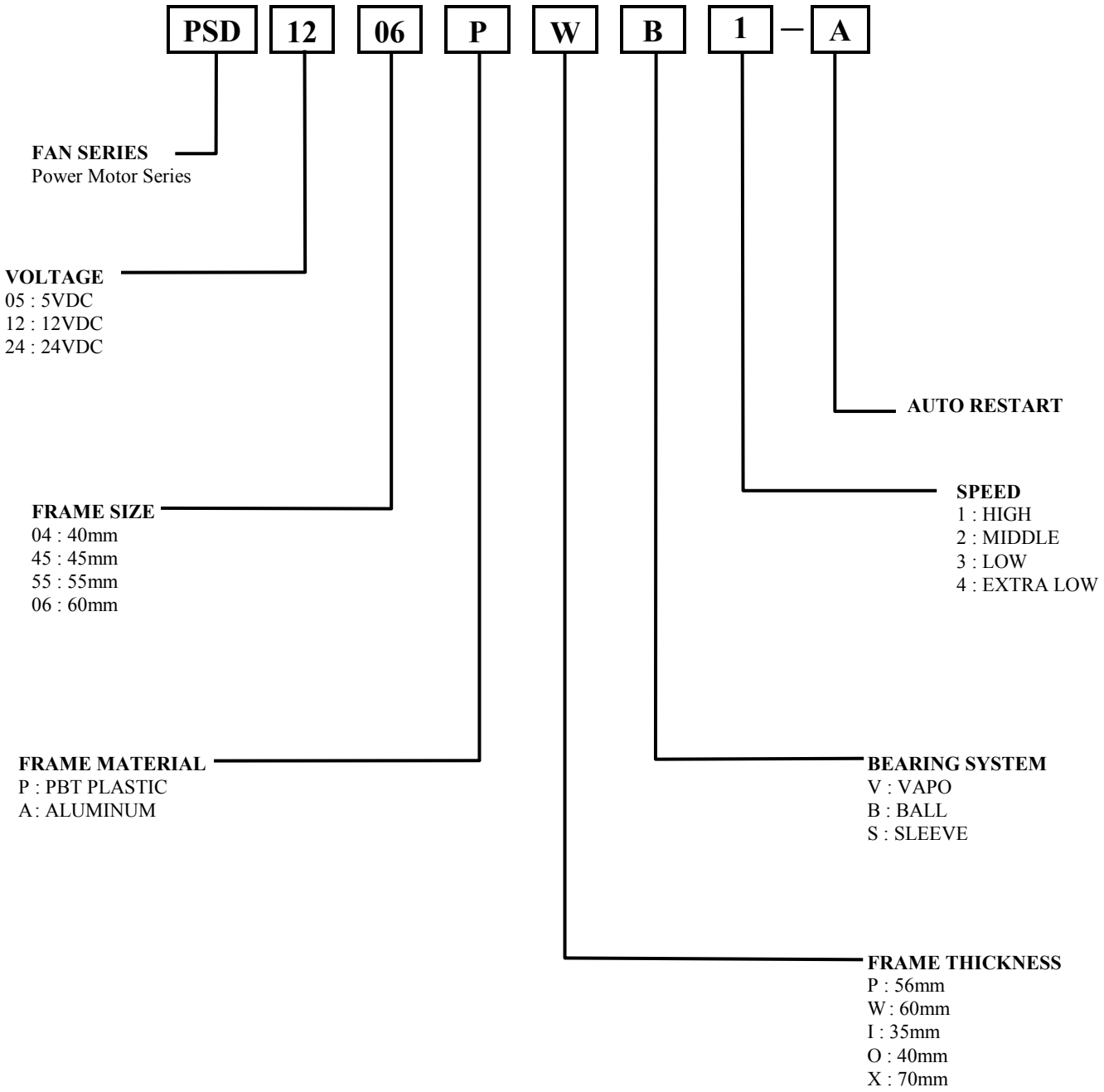

P/N: GN

RoHS compliance

II. SPECIFICATION

1. MECHANICAL CHARACTERISTIC

MOTOR DESIGN	Single phase, 4-poles Brushless DC motor
BEARING SYSTEM	Precision ball bearing system
DIMENSIONS	See Page 6
MATERIALS OF FRAME	Thermoplastic PBT of UL 94V-0
MATERIALS OF FAN BLADE	Thermoplastic PBT of UL 94V-0
DIRECTION OF ROTATION	Counter-clockwise viewed from front of fan blade
MOUNTING HOLES	Diameter 5.4 mm in 8 holes
DIAMETER OF BLADE	56.1 mm
WEIGHT	197 g/set
IMPELLER ROTOR WEIGHT	IN: 37 g OUT: 35 g

2. ELECTRIC CHARACTERISTIC

RATED VOLTAGE	12 VDC
RATED CURRENT	1550 mA
RATED POWER CONSUMPTION	18.60 WATTS
OPERATING VOLTAGE RANGE	10.2~13.8 VDC
STARTING VOLTAGE	10.2 VDC (25 deg. C POWER ON/OFF)
OPERATING TEMPERATURE RANGE	-10 to + 70 deg. C
STORAGE TEMPERATURE RANGE	-40 to + 70 deg. C

3. PERFORMANCE CHARACTERISTIC

RATED SPEED	**10800/10400 RPM ± 10% at rated voltage**
AIR FLOW	**61.6 CFM**
STATIC PRESSURE	**2.30 Inch-H_2O**
ACOUSTIC NOISE	**66.8 dB(A)**
AIR FLOW V.S. PRESSURE	**See Page 5**
INSULATION CLASS	**UL Class A**
INSULATION RESISTANCE **PLASTIC HOUSING**	**10M ohm at 500 VDC between internal stator and lead wire (+)**
DIELECTRIC STRENGTH	**Applied AC 500 V for one minute or AC 600 V for 2 Seconds between housing and lead wire (+)**
LIFE EXPECTANCY	**70,000 Hours at 40 deg. C, 65% humidity, 90% CL.**
PROTECTION	☑**Automatic Restart** Note: In a situation where the fan is locked by an external force while the electricity is on, an increase in coil temperature will be prevented by temporarily turning off the electrical power to the motor. The fan will automatically restart when the locked rotor condition is released.
	☑**Polarity Protection**

4. SAFETY

SAFETY	UL	CUR	TUV	CE
NO.	E77551	E77551	✓	✓

MODEL : PSD1206PWB1-A
P/N : (2).B4812.F.GN

PERFORMANCE CURVES

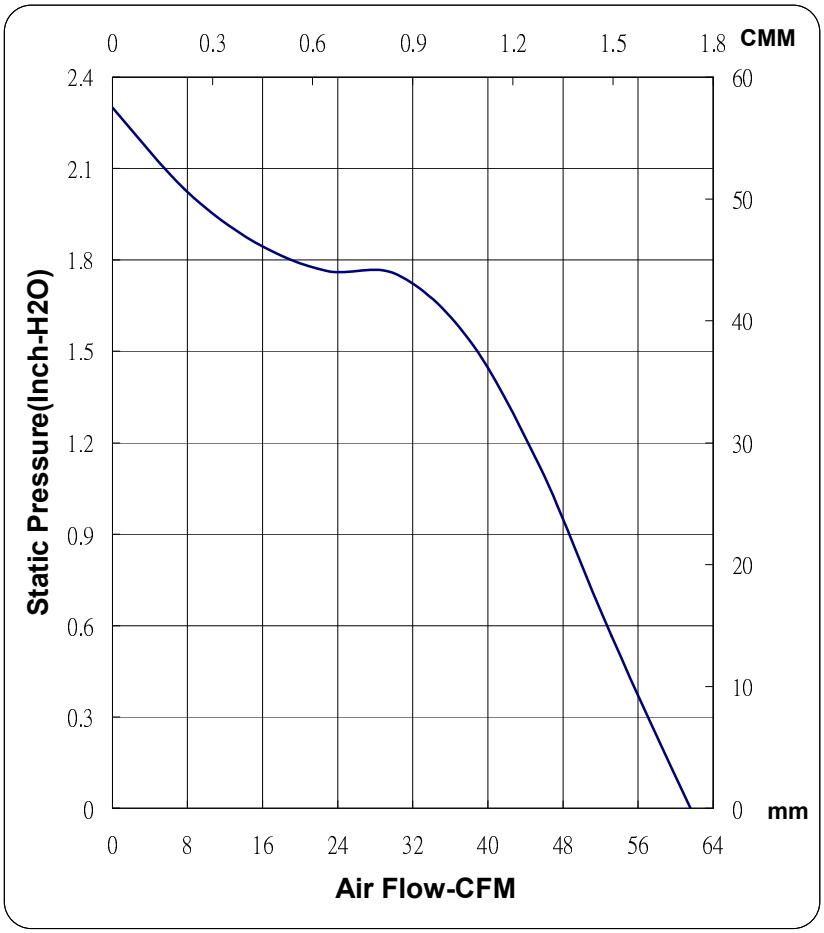

DIMENSIONS

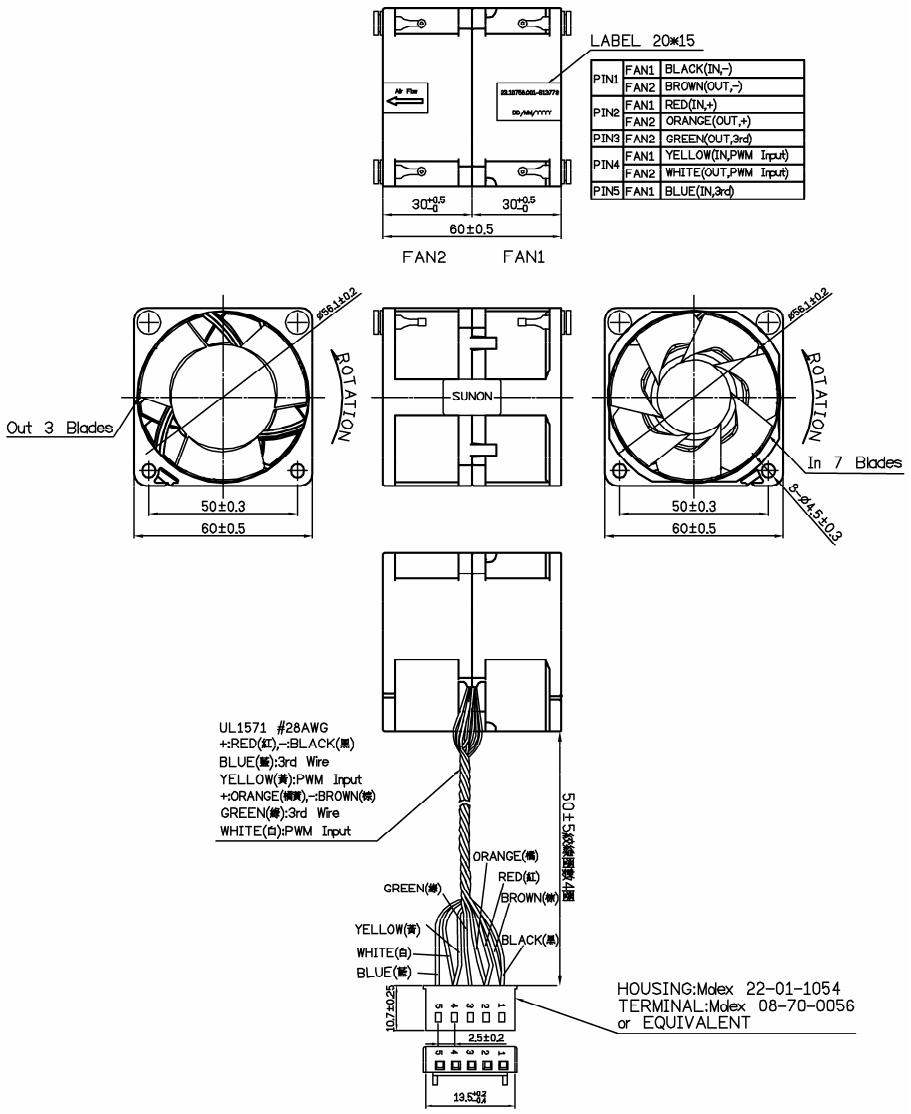

UNIT：mm

建準電機工業(股)公司
D.C.C.
2015.01.20
發 行 章

First Article Inspection Report

PPAR No :		Supplier Name:	SUNON	Submission Date:	2013/2/15	Supplier FA Inspector:	zhao fang wen
Part Number:	PSD1206PWB1-A (2).B4812.F.GN	Part Description:		Part Revision:		Supplier FAI reviewer:	cheng xian li
Cavity/Tool # :		Material Spec :		Finishing Spec :		FLEX FA Inspector:	

DRAWING SPECIFICATIONS						INSPECTION RESULTS										INSPECTION ANALYSIS					Inspection Method	COMMENTS		
ITEM	DRAWING LOCATION	CTF?	NOMINAL	+TOL	-TOL	Supplier FAI samples			Flex FAI Samples		Deviation from Nominal					Mean	% Tolerance		Accept/Reject			Supplier Remarks	Flextronics Disposition	Customer Disposition
						1	2	3	4	5	1	2	3	4	5		UPPER	LOWER	HIGH	LOW				
	1		30.000	0.500	0.000	30.200	30.220	30.210	30.22	30.23	0.200	0.220	0.210	0.220	0.230	30.216	46%	-	Accept	Accept				
	2		30.000	0.500	0.000	30.220	30.230	30.220	30.22	30.21	0.220	0.230	0.220	0.220	0.210	30.220	46%	-	Accept	Accept				
	3		60.000	0.500	0.500	59.850	59.870	59.900	59.89	59.91	-0.150	-0.130	-0.100	-0.110	-0.090	59.884	0%	30%	Accept	Accept				
	4		50.000	0.300	0.300	50.060	50.090	49.970	49.940	50.020	0.060	0.090	-0.030	-0.060	0.020	50.016	30%	20%	Accept	Accept				
	5		60.000	0.500	0.500	59.860	59.840	59.950	59.910	59.870	-0.140	-0.160	-0.050	-0.090	-0.130	59.886	0%	32%	Accept	Accept				
	6		56.100	0.200	0.200	56.080	56.100	56.080	56.100	56.090	-0.020	0.000	-0.020	0.000	-0.010	56.090	0%	10%	Accept	Accept				
	7		50.000	0.300	0.300	50.050	49.980	50.060	50.040	49.990	0.050	-0.020	0.060	0.040	-0.010	50.024	20%	7%	Accept	Accept				
	8		60.000	0.500	0.500	59.880	59.920	59.910	59.860	59.850	-0.120	-0.080	-0.090	-0.140	-0.150	59.884	0%	30%	Accept	Accept				
	9		4.500	0.300	0.300	4.480	4.520	4.520	4.510	4.490	-0.020	0.020	0.020	0.010	-0.010	4.504	7%	7%	Accept	Accept				
	10		56.100	0.200	0.200	56.080	56.100	56.080	56.100	56.100	-0.020	0.000	-0.020	0.000	0.000	56.092	0%	10%	Accept	Accept				

Conformance to Notes:

Note #	Note Description
	技術文件 禁止拷貝

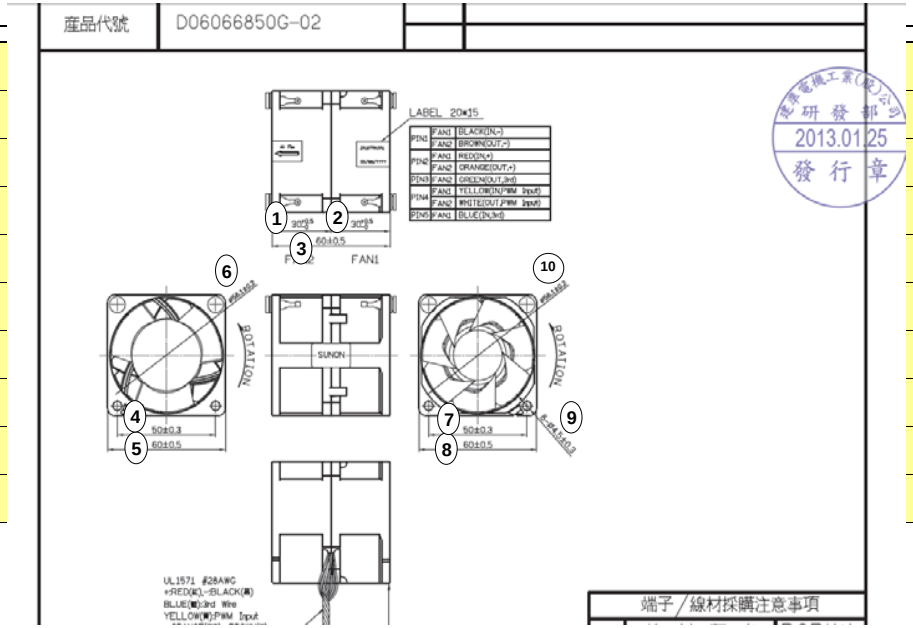

Note #	Note Description	Inspection Method	Supplier Remarks	Flextronics Disposition	Customer Disposition

Internal Use Only

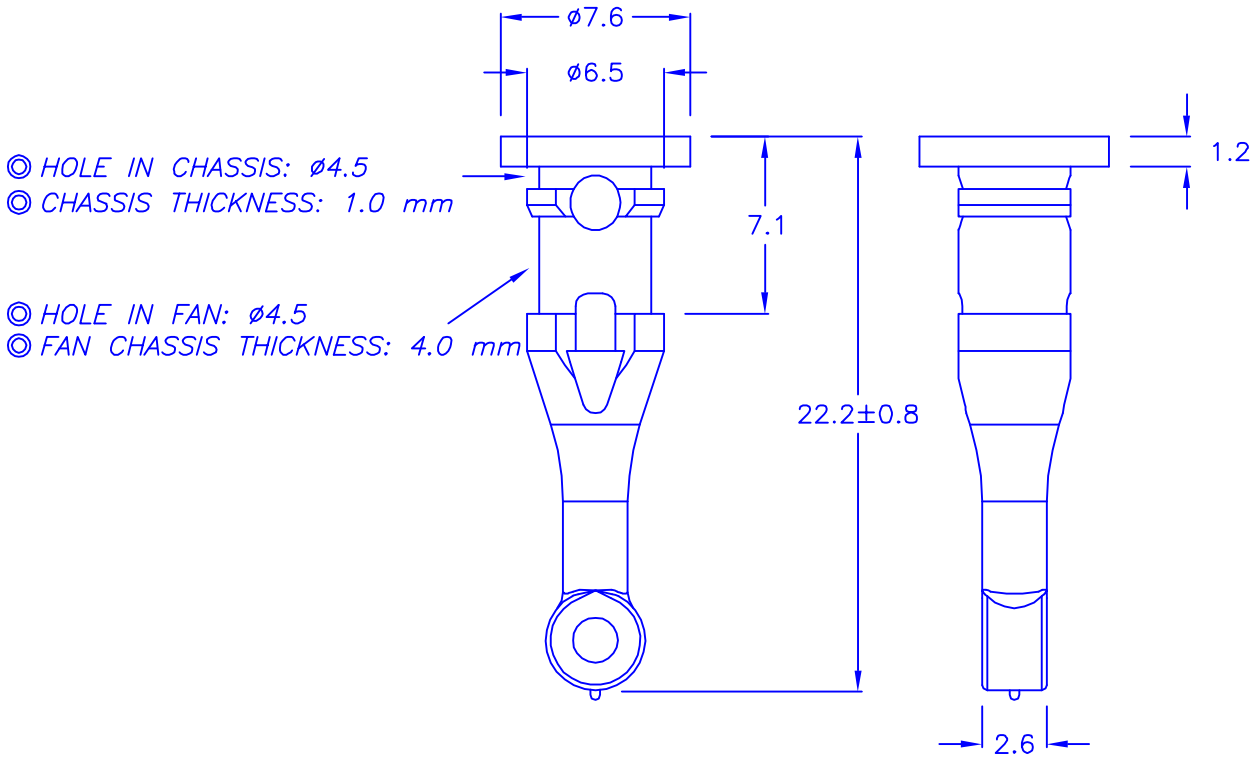

PINGOOD ENTERPRISE CO., LTD. R&D DEPARTMENT 2011.08.29. 核發章

◎HF
◎ROHS compliant

DRAW NO. PGAS016689	GJS

TOLERANCE:

L≤10	±0.2
10<L≤30	±0.3
30<L≤50	±0.5
50<L≤100	±0.7
100<L≤250	±1.2
ABOVE 250	±1.5

UNIT	SCALE
mm	

APPROVED BY		2011.08.29.
REVIEWED BY		2011.08.29.
DRAWN BY	Paggi	2011.08.29.

MATERIAL: TPE

COLOR: BLACK

試片硬度: 52°±10°

品固企業股份有限公司
品基電子(東莞)有限公司
蘇州品基電子科技有限公司
鑽 隆 有 限 公 司
PINGOOD ENTERPRISE CO.,LTD.

PART NAME: 風扇鉚釘 FAN SNAP RIVET

PART NO: SR-22A-TMB

SIZE: A

VERSION: 2A

SHEET 1 OF 1

表單號碼QF135

LABEL

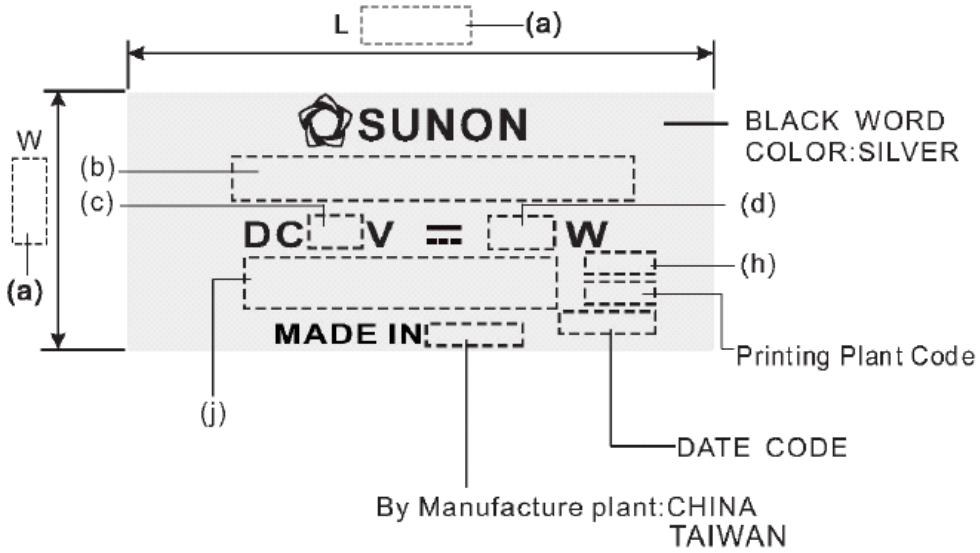

(a)Dimension	(b)Model Name	(c)Voltage	(d)Power Consumption	(h)Protection	(j)Safety
25*11	PSD1206PWB1-A (2).B4812.F.GN	12	18.60	EP	TUV/UL+CUR

1.English font type: Swis721 Series & Switzerland Narrow, Chinese font type: 超研澤中明簡體.

2.Safety(TUV/UL+CUR)

FAN 3rd WIRE SIGNAL

● F Type (Frequency Generator)

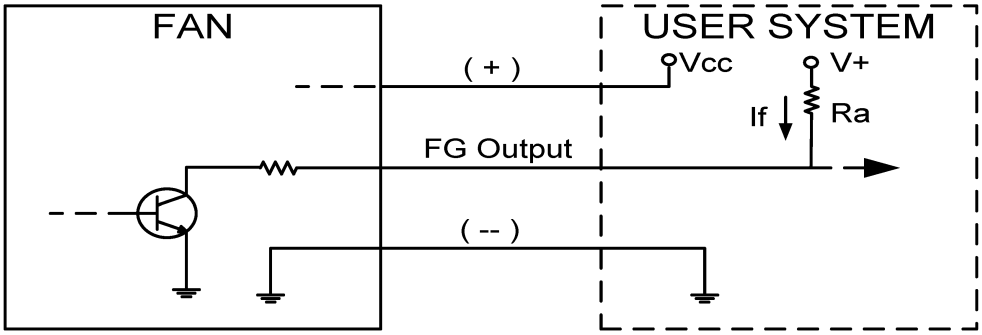

***Ra ≧ V^+ / If (max)**

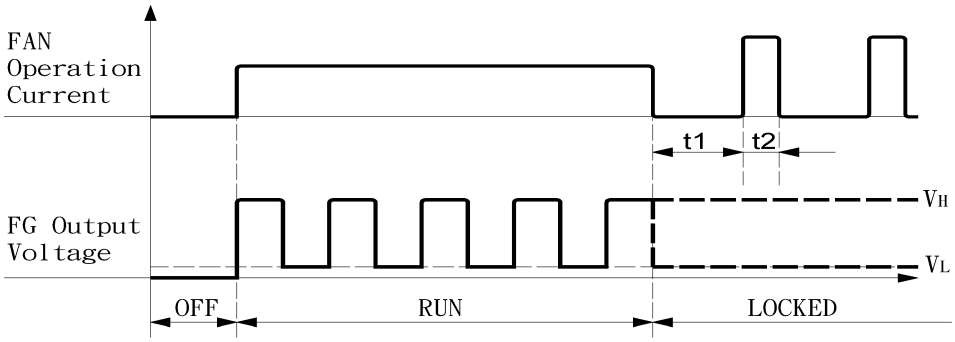

★Electrical Characteristics ：(at Ta = 25℃) Vcc =12V

Parameter	Ratings			Unit
	min	typ.	max	
FG Supply Voltage(V+)	3	--	13.8	Voltage
FG Output Current (If)	--	--	5	mA
FG Output (VL)	0	--	0.5	Voltage
FG Output (VH)	--	V+	--	Voltage
Ratio(=t1/t2)	--	10	--	

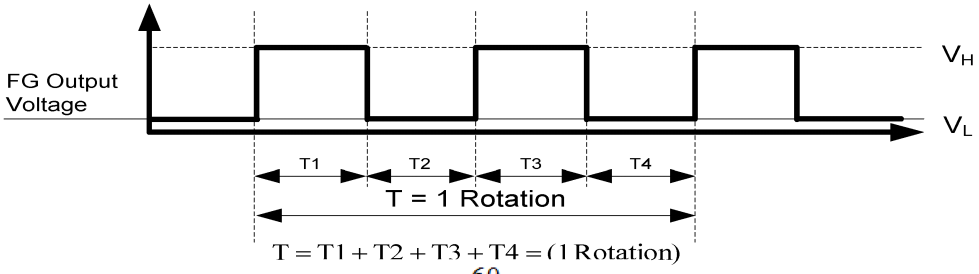

$$T = T1 + T2 + T3 + T4 = (1\ Rotation)$$

$$T = \frac{60}{rpm}$$

PWM INPUT SIGNAL

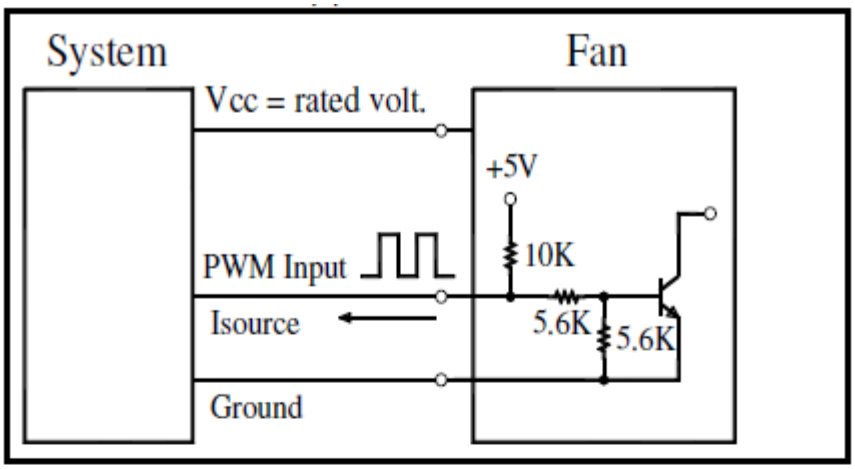

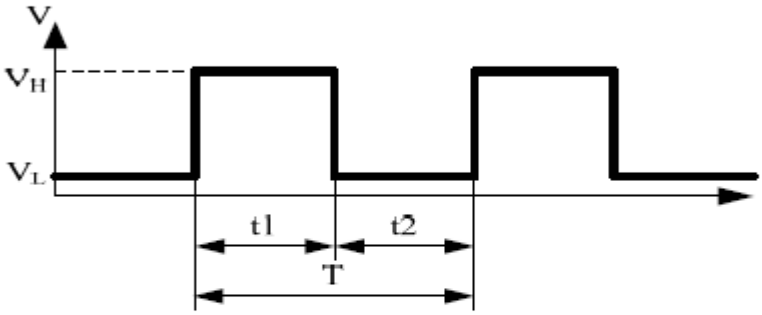

1. Period : $T = \frac{1}{f_{PWM}} = t1 + t2(sec)$.

2. Duty Cycle (D.C.) : $\frac{t1}{t1+t2} * 100 = \frac{t1}{T} * 100(\%)$.

3.PWM Duty Cycle VS Speed (at Ta = 25℃,Vcc =12VDC,fpwm=25KHz)

PWM Duty Cycle (%)	IN FAN Speed (R.P.M.) (REF.)	OUT FAN Speed (R.P.M.) (REF.)
100	10800±10%	10400±10%
50	5550±10%	4800±10%
0-20	3200±10%	2600±10%

★ Electrical Characteristics at Ta = 25℃ ; Vcc=12V

Parameter	Min	Typical	Max	Unit
f pwm	22K	25K	28K	Hz
V_H	2	--	5.5	V
V_L	0	--	0.8	V
Isource	--	0.5	--	mA
D.C.	0	—	100	%

* The speed is default to be maximum if PWM input pin is unconnected.
* Min. start up duty cycle is 0%.

CROSS-SECTIONAL VIEW OF FAN

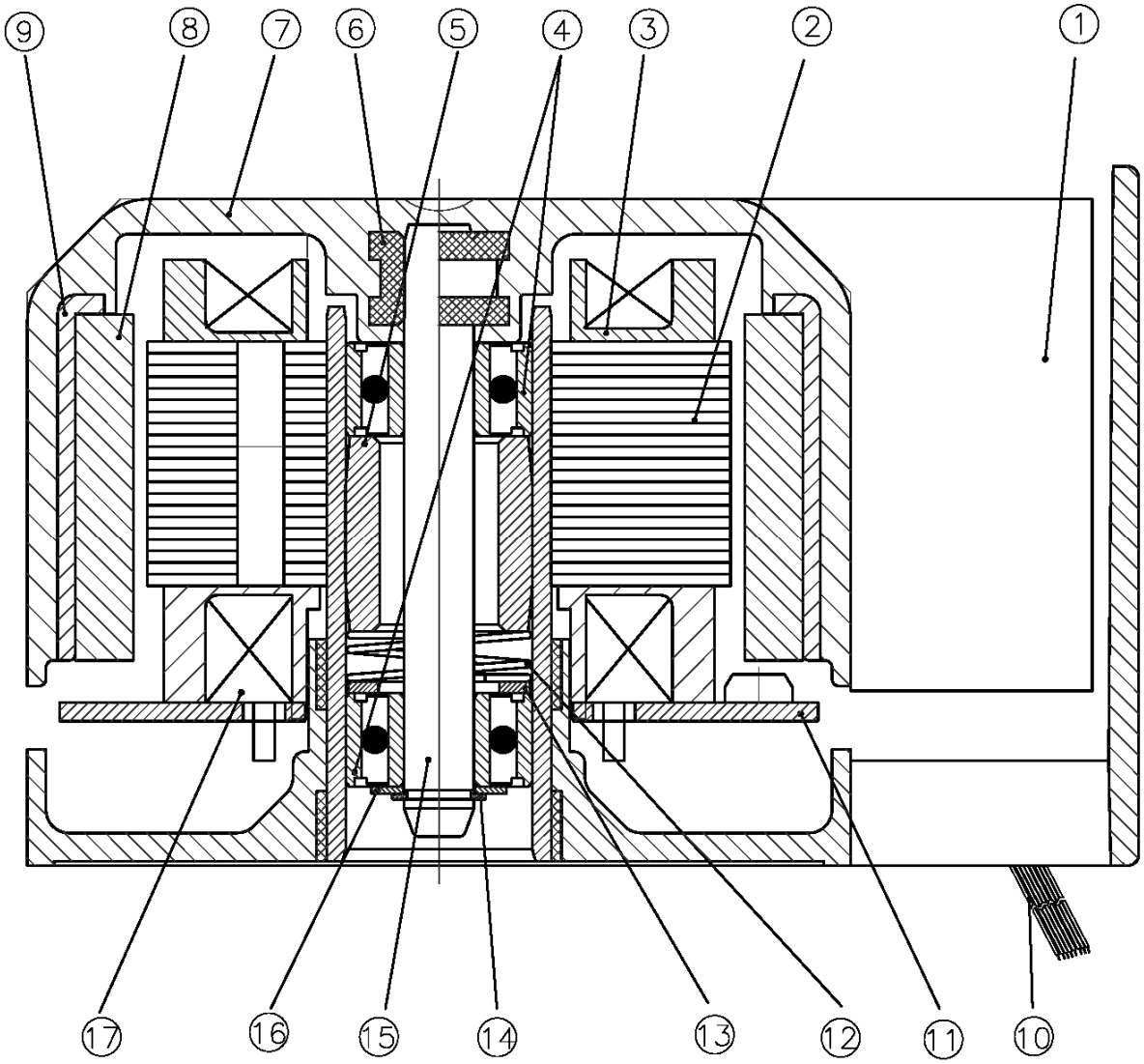

P A R T S L I S T

ITEM	DESCRIPTION	MATERIAL	MAKER/SUPPLIER
1	Frame	1.PBT-4130/2100/4830 UL NO.: E59481 2.D202G30 UL NO.: E107536 3.PBT-RG301 BK028 UL NO.: E171666	Chang Chun Plastics Co., Ltd. Shinkong Synthetic Fibers Corp. Guang zhou Kingfa Sci. & Tech. Co., Ltd.
2	Stator	H23	Nippon Steel Corporation
3	Bobbin	1.PBT-4130/2100/4830 UL NO.: E59481 2.D202G30 UL NO.: E107536 3.PBT-RG301 BK028 UL NO.: E171666	Chang Chun Plastics Co., Ltd. Shinkong Synthetic Fibers Corp. Guang zhou Kingfa Sci. & Tech. Co., Ltd.
4	Bearing System	Ball	NMB Corporations Japan. SENTECB CORPORATION
5	Brass Ring	C3604BD	Chuan Li Co., Ltd. WEI MENG MERAL PRODUCTS CO., LTD CHIANENG METAL MFY. CO., LTD.
6	Shaft Holder	C3604BD	Chuan Li Co., Ltd. FOR AND ON BEHALF OF ON WARD INC. LIMITED CHIANENG METAL MFY. CO., LTD. WE HSIANG PRECISE ELECTRIC INDUSTRY (KUNSHAN) CO., LTD. SHIN YUAN ELECTRONICS PRODUCTS (KUN SHAN) CO., LTD. HUIZHOU CITY TENGMAO PRECISION INDUSTRY CO., LTD.
7	Impeller	1.PBT-4130/2100/4830 UL NO.: E59481 2.D202G30 UL NO.: E107536 3.PBT-RG301 BK028 UL NO.: E171666	Chang Chun Plastics Co., Ltd. Shinkong Synthetic Fibers Corp. Guang zhou Kingfa Sci. & Tech. Co., Ltd.
8	Flexible Magnet	SR-FERRITERUBBER MAGNET	Supper Electric Co., Ltd. HUANAN ELECTRONICS FACTORY TDK TAIWAN CORPORATION (TDK SHANGHAI INTERNATIONAL TRADING CO., LTD.)

P A R T S L I S T

ITEM	DESCRIPTION	MATERIAL	MAKER/SUPPLIER
9	Rotor Cup Assembly	SPCC SECC	Hightech Components Co., Ltd. SUNON HARDWARE CO., LTD
10	Lead Wire	PVC Insulated Wire 26 awg TR-64 UL NO.: E41396 UL NO.: E148000	Eutronic Technology Co., Ltd. Pacific Electric Wire & Cable Co., Ltd. Chi Tien Wiring Co., Ltd. DONGGUAN(GUNEETAL)GUNEEHOL ELECTRIC WIRE &CABLE Co., Ltd. LTK WIRING Co., Ltd.
11	P.C.Board	FR-4 94V-0 UL NO.: E131979 UL NO.: E78604 UL NO.: E105119 UL NO.: E233153 UL NO.: E211670 UL NO.: E208307	Lu Hsiang Enterprise Co., Ltd. Lu Yuh Industrial Co., Ltd. CHIH HSIEN ENTERPISE CO., LTD.. DONGGUA MAAN KUEN CHENGHO ELECTRON LTD. Kunshan Wangzheng Printed Circuit Board Co., Ltd. NCF (HK) LTD.
12	Spring	SUS 304	Gi Hon Enterprise Co., Ltd. UNION SPRING METAL CO.,LTD. FKY Metal Products Corp.Ltd Dongguan Guangqing Electronics CO.,LTD
13	Washer	SPCC	COMTECH PRECISION IND. CO., LTD. Tsao Jone Metals Co., Ltd Jin Yi Cherng Precision Co., Ltd.
14	Retaining Ring	SK5	SONG CHYUAN INDOSTRIAL CO.,LTD. Tsao Jone Metals Co., Ltd.
15	Shaft	SUS-420	Jin Yi Cherng Precision Co., Ltd. HUIZHOU CITY TENGMAO PRECISION INDUSTRY CO., LTD. DONG GUAN JIN YI CHERNG NEEDLE BEARING ING.
16	Washer	SUS430	TECHLUXE INDUSTRIES LIMITED (KUNSHAN CHANG-HE PRECISION ELECTRONICS CO., LTD.)
17	Winding(Coil)	Enamelled Copper Wire UEW2 UL NO.: E174837 UL NO.: E196473 UL NO.: E164502	Jung Shing Wire Co., Ltd. CHIN YIH WIRE L.L.C GUANG DONG RONSEN SUPER MICRO-WIRE CO., LTD. TATUNG GO.

III. OTHER SPECIFIED TESTING

The following is a general description of certain tests that are performed on representative Sunon fans. Nothing in this document is intended to suggest that these tests are performed on every model of Sunon fan. Moreover, the descriptions that follow each test are meant only to provide a general explanation of each test. If you would like a more detailed explanation as to any test identified in this Section, Sunon can provide such an explanation upon request.

1. DROP PROOF TEST

Fans are packaged in a standard size shipping box and are dropped to the ground from certain heights and angles depending on the weight of the particular box.

2. HUMIDITY PROOF TEST

The fan is operated for 96 continuous hours in an environment with humidity of 90% to 95% RH at 60°C ± 2°C.

3. VIBRATION PROOF TEST

Vibration with an amplitude 2mm and a frequency of 5-55-5hz is applied in all 3 directions (X,Y,Z), in cycles of 1 hour each, for a total vibration time of 3hours.

4. THERMAL CYCLING TEST

The fan is operated in a testing chamber for 50 cycles. In each cycle, the temperature is gradually increased from -10°C to 70°C for 90 minutes, and subsequently operated at 70°C for 120 minutes. The temperature is then gradually decreased from 70°C to -10°C for 90 minutes, and subsequently operated at -10°C for 120 minutes.

5. SHOCK PROOF TEST

100G of force is applied in the 3 directions (X,Y, and Z) for 2 milliseconds each.

6. LIFE EXPECTANCY

The “Life Expectancy” of SUNON fans is determined in SUNON’s reliability test laboratory by using temperature chambers. The “Life Expectancy” of this fan has not been evaluated for use in combination with any end application. Therefore, the Life Expectancy Test Reports (L10 and MTTF Report) that relate to this fan are only for reference.

IV. CHARACTERISTIC DEFINITION

The following is a general description of certain tests that are performed on representative Sunon fans in order to determine the specifications of the fan**.** Nothing in this document is intended to suggest that these tests are performed on every model of Sunon fan. Moreover, the descriptions that follow each test are meant only to provide a general explanation of each test. If you would like a more detailed explanation as to any test identified in this Section, Sunon can provide such an explanation upon request.

1. ACOUSTICAL NOISE

Measured in a semi-anechoic chamber with background noise level below 15dB(A).

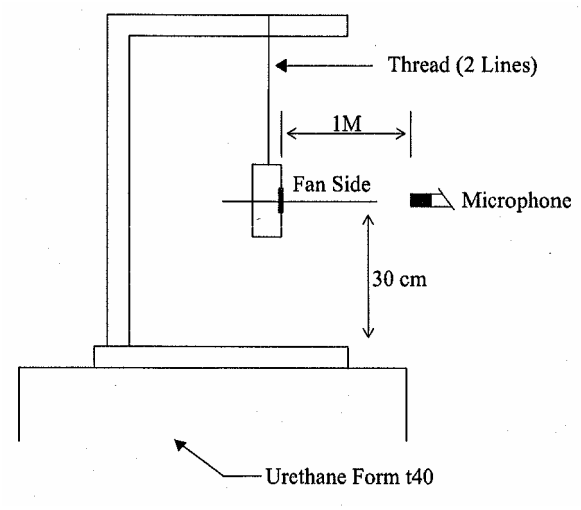

1 METER FROM MICROPHONE TO FAN INTAKE

The fan is running in free air under shaft horizontal condition with the microphone at distance of one meter from the fan intake.

2. INPUT POWER

Measured after continuous 10 minute operation at rated voltage in clean air (STATIC PRESSURE=0), and at ambient temperature of 25 degrees C under shaft horizontal condition.

3. RATED CURRENT

Measured after continuous 10 minute operation at rated voltage in clean air (STATIC PRESSURE=0), and at ambient temperature of 25 degrees C under shaft horizontal condition.

4. RATED SPEED

Measured after continuous 10 minute operation at rated voltage in clean air (STATIC PRESSURE=0), and at ambient temperature of 25 degrees C under shaft horizontal condition.

5. STARTING VOLTAGE

Measured the voltage which enables to start the fan in the clean air (static pressure = 0) by switching on at the voltage under shaft horizontal condition. It is not at continuously increasing voltage adjustment.

6. LOCKED ROTOR CURRENT

Measured immediately after the fan blade is locked.

7. AIR FLOW AND STATIC PRESSURE

The performance specification of air flow and static pressure shown in this specification for approval is measured using the exhaust method. A double chamber is used in accordance with AMCA 210 standard or DIN 24163 specification . The values are recorded when the fan speed has stabilized at rated voltage.

8. INSULATION RESISTANCE

1. PLASTIC HOUSING:
   (1) Measured between internal stator and lead wire(+).
   (2) Measured between housing and lead wire(+).

2. ALUMINIUM HOUSING:
   Measured between internal stator and lead wire(+).

9. DIELECTRIC STRENGTH

Measure between housing and lead wire(+).

V. TESTING PROCEDURES

The following is a general description of the life testing procedures performed on certain representative Sunon fans. Nothing in this document is itended to suggest that these life tests are performed on every model of Sunon fan. Moreover, the descriptions that follow are meant only to provide a general explanation of Sunon's life testing procedure. If you would like a more detailed explanation as to Sunon's life testing procedure, Sunon can provide such an explanation upon request.

1. Life Expectancy Testing Procedure

STEP 1 : Twenty to fifty samples are randomly chosen from the production line.

STEP 2 : Each sample is numbered and the performance characteristics of each sample is measured. Characteristics that are measured include: speed (RPM); starting voltage; rated voltage; electric current (AMP); power consumption (WATTS); noise level (dB(A)); insulation resistance; and vibration.

STEP 3 : Each sample is placed in a temperature/humidity chamber, which is set at a certain temperature. Each fan is connected to a power supply and mounted with the fan shaft in a horizontal position.

STEP 4 : The fans are monitored by daily to determine whether any of the samples have failed.

STEP 5 : The testing will be conducted continuously for at least ninety (90) days, unless otherwise requested by a customer.

REMARKS :

1. All samples are measured before, during and after testing.
2. All samples are measured when the shaft is in a horizontal position at rated voltage in clear air.
3. To obtain a confidence level 90% for results of the testing, we check CHIP-SQUARE table in order to calculate MTBF.

2. THE CRITERION OF FAILURE:

If any of the following conditions are present, the fan shall be rejected as non-compliant.

1. When speed degrades more than 15 percent of initial speed.
2. When strange sounds or detectable vibrations are detected.
3. When dielectric strength fails to meet the specific specification.
4. When samples stop running.
5. When electric current or power consumption exceeds more than 15 percent of initial data.

VI. NOTE

Ⅰ.SAFETY

1. DO NOT use or operate this fan in excess of the limitations set forth in this specification. SUNON is not be responsible for the non-performance of this fan and/or any damages resulting from its use, if it is not used or operated in accordance with the specifications.

2. SUNON recommends adding a protection circuit to the product or application in which this fan is installed, such as a thermo-fuse, or current-fuse or thermo-protector. The failure to use such a device may result in smoke, fire, electric shock by insulation degradation in cases of motor lead short circuit, overload, or over voltage, and/or other failure.

3. SUNON recommends installing a protection device to the product or application in which this fan is installed if there is a possibility of reverse-connection between VDC (+) and GND (-). The failure to install such a device may result in smoke, fire, and/or destruction, although these conditions may not manifest immediately.

4. This fan must be installed and used in compliance with all applicable safety standards and regulations.

5. Use proper care when handling and/or installing this fan. Improper handling or installation of this fan may cause damage that could result in unsafe conditions.

6. Use proper care during installation and/or wiring. Failure to use proper care may cause damage to certain components of the fan including, but not limited to, the coil and lead wires, which could result in smoke and/or fire.

7. DO NOT use power or ground PWM to control the fan speed. If the fan speed needs to be adjusted, please contact Sunon to customize the product design for your application.

8. For critical or extreme environments, including non stop operation, please contact Sunon and we will gladly provide assistance with your product selection to ensure an appropriate cooling product for your application.

II. SPECIFICATION MODIFICATION

1. SUNON offers engineering assistance on fan installation and cooling system design.

2. All changes, modifications and/or revisions to the specifications, if any, are incorporated in the attached specifications.

3. No changes, modifications and/or revisions to these specifications are effective absent agreement, by both Sunon and the customer, in writing.

4. This fan will be shipped in accordance with the attached specification unless SUNON and the customer have agreed otherwise, in writing, as specificied in Paragraph 3, above.

III. OTHER

1. When building your device, please examine thoroughly any variation of EMC, temperature rise, life data, quality, etc. of this product by shock/drop/vibration testing, etc. If there are any problems or accidents in connection with this product, it should be mutually discussed and examined.

2. Use proper care when handling this fan. Components such as fan holders or bearings may be damaged, if touched with fingers or other objects. Additionally, static electricity (ESD) may damage the internal circuits of the fan.

3. DO NOT operate this fan in proximity to hazardous materials such as organic silicon, cyanogens, formalin, phenol, or corrosive gas environments including, but not limited to, H_2S, SO_2, NO_2, or Cl_2.

4. SUNON recommends that you protect this fan from exposure to outside elements such as dust, condensation, humidity or insects. Exposure of this fan to outside elements such as dust, condensation, humidity or insects may affect its performance and may cause safety hazards. SUNON does not warrant against damage to the product caused by outside elements.

5. This fan must be installed properly and securely. Improper mounting may cause harsh resonance, vibration, and noise.

6. Fan guards may prevent injury during handling or installation of the fan and are available for sale with this fan.

7. Unless otherwise noted, all testing of this fan is conducted at 25°C ambient temperature and sixty-five percent (65%) relative humidity.

8. DO NOT store this fan in an environment with high humidity. This fan must be stored in accordance with the attached specifications regarding storage temperature. If this fan is stored for more than 6 months, SUNON recommends functional testing before using.

9. SUNON reserves the right to use components from multiple sources at its discretion. The use of components from other sources will not affect the specifications as described herein.

10. The "Life Expectancy" of this fan has not been evaluated for use in combination with any end application. Therefore, the Life Expectancy Test Reports (L10 and MTTF Report) that relate to this fan are only for reference.

VI. WARRANTY

This fan is warranted against all defects which are proved to be fault in our workmanship and material for one year from the date of our delivery. The sole responsibility under the warranty shall be limited to the repair of the fan or the replacement thereof, at SUNON's sole discretion. SUNON will not be responsible for the failures of its fans due to improper handing, misuse or the failure to follow specifications or instructions for use. In the event of warranty claim, the customer shall immediately notify SUNON for verification. SUNON will not be responsible for any consequential damage to the customer's equipment as a result of any fans proven to be defective.

Declaration of RoHS

Control declaration of environment-related substances/ materials

1. In accordance with the Restriction of Hazardous Substances (RoHS) Directive 2011/65/EU, Sunon product with P/N: GN models have complied with law and discipline not to employ the forbidden substances, and restrict the allowable concentration of some limited substances deliberately in our components.

No	Substance		Criteria
1	CFCs & HCFCs (ozone depleting substances)		Forbidden
2	Chlorinated Organic Solvent		Forbidden
3	Lead and its compounds	Plastic (Frame, Impeller, wire harness, etc.)	<100ppm
		Solder	<1000ppm
		Steel alloy	<3500ppm
		Aluminium alloy	<4000ppm
		Copper alloy	<4wt%
4	Cadmium and its compounds	Solder	<20ppm
		Parts composed of metals containing zinc (e.g. brass, zinc for die casting)	<100ppm
		Plastic	<5ppm
5	PBBs and PBDEs		Forbidden
6	PCB and PCT		Forbidden
7	CP, Short-chain Chlorinated paraffins C10-13, Cl ≥48 wt%		Forbidden
8	Mirex		Forbidden
9	PCN		Forbidden
10	Hexavalent Chromium compounds		<100ppm
11	Mercury and its compounds		Forbidden
12	Asbestos		Forbidden
13	Organic Tin compounds		Forbidden
14	Azo compounds		Forbidden
15	TBBP-A in external case plastic parts of products (PCB is exempted)		<1000ppm
16	Nickel in external case parts, which are likely to result in prolonged skin exposure		<1000ppm
17	Hexabromocyclododecane (HBCDD)		<1000ppm
18	Di-butyl Phthalate (DBP)		<1000ppm
19	Benzyl butyl Phthalate (BBP)		<1000ppm
20	Di-ethylhexyl Phthalate (DEHP)		<1000ppm
21	Di-isobutyl Phthalate (DIBP)		<1000ppm

Model Nos.	Source Of Supply	Section
USR, CNR - Models A2175-HBL TC.B4792(Y), A2175-HBL TC.B4833(Y), A2175-HBT TC.B4792(Y), A2175-HBT TC.B4833(Y), A2123-HBL (7).T(Y) and A2123-HBT (7).T(Y) series, where (Y) stands for 30 variables, each variable may be A through Z, 0 through 9, "-", "(", ")", ".", "/" or blank.	AC	237
USR, CNR - Models KD1204PKBX-A B4604-3(Y), PF40201B3-Q0(Y), PSD4806PMB1-A B4730(Y), MF80201V1-C(Y), EF35070S1-C(Y), PSD2406PMB1-A (2).B4769(Y), MF50100V2-C(Y), EG50060S1-C0(Y), MF75090V1-C23(Y), MG60120V1-C23(Y) and MG50050V1-C0(Y) series, where (Y) stands for 30 variables, each variable may be A through Z, 0 through 9, "-", "(", ")", ".", "/" or blank	DC	238
USR, CNR - Models EF92251S1-Q0(Y), MF70251V1-Q(Y), MF70251V2-Q02(Y), MF70251V1-Q0(Y), MF70251V2-Q01(Y) and EFC0251S1-C(Y) series, where (Y) stands for 30 variables, each variable may be A through Z, 0 through 9, "-", "(", ")", ".", "/" or blank	DC	239
USR, CNR - Models MF60090V1-C55(Y), MF60070V1-C14(Y), MG60120V1-C28(Y), MG60120V1-C25(Y), MG60120V1-C26(Y), EF35100S2-Q(Y), MB40101V2-Q0(Y), MF40101V1-Q0(Y), EF35101S1-Q(Y), MC40101V2-Q(Y), PF92381B(A)(Y), PF40201B3-Q00(Y), PF40281B(B)(Y), PF38281B(B)(Y), MF70251V1-Q05(Y), MC50101V3-Q(Y) and MB40202VX-Q(Y) series, where (A) may X or 1; (B) may 2, 3 or 4; (Y) stands for 30 variables, each variable may be A through Z, 0 through 9, "-", "(", ")", ".", "/" or blank.	DC	240
USR, CNR Component - Models DP203A 2123LBL.(5)(Y), DP203A 2123LBT.(5)(Y), Note: (Y) stands for 30 variables, each variable may be A through Z, 0 through 9, "-", "(", ")", ".", "/" or blank.	**AC**	**241**
USR, CNR - Models MF60070V1-C15(Y), EF50060S1-C1(Y), MG60120V1-C27(Y), EG50040S1-C19(Y), EF30080S2-E(Y), EC45101S3-Q(Y), PF60601B1-Q(Y), PSD1206PWB1-A (2)(Y), EF80251B2-Q(Y), ME70151V1(Y), ME70151V2(Y), ME70151V3(Y), EF55101S2-C0(Y) and PF80252B2-Q(Y) series, where (Y) stands for 30 variables, each variable may be A through Z, 0 through 9, "-", "(", ")", ".", "/" or blank.	DC	242

Note: USR - United States Standard, Recognized
CNR - Canadian National Standard, Recognized

機密文件 禁止拷貝
Confidentiality Copy Forbidden

Zertifikat *Certificate*

TÜVRheinland®

Zertifikat Nr. *Certificate No.*
R 50171004

Blatt *Page*
0099

Ihr Zeichen *Client Reference*	**Unser Zeichen** *Our Reference*	**Ausstellungsdatum**	*Date of Issue (day/mo/yr)*
TUV121214/114004442	ZTW1-JAL- 11019043 046	11.01.2013	

Genehmigungsinhaber *License Holder*
Sunonwealth Electric Machine
Industry Co., Ltd.
No. 30, Ln. 296, Xinya Rd.
Qianzhen Dist. Kaohsiung 80673
Taiwan, R.O.C.

Fertigungsstätte *Manufacturing Plant*
Sunon Electronics (Kunshan)
Co., Ltd.
168 Nanban Road, Kunshan
Jangsu 215301
P.R. China

Prüfzeichen *Test Mark*

TÜVRheinland ZERTIFIZIERT
Bauart geprüft
Sicherheit
Regelmäßige Produktions-überwachung
www.tuv.com
ID 2000000000

Geprüft nach *Tested acc. to*
EN 60950-1:2006+A11+A1+A12

Zertifiziertes Produkt **(Geräteidentifikation)** — **Lizenzentgelte - Einheit**
Certified Product *(Product Identification)* — *License Fee - Unit*

Ventilator (DC Fan)

wie Blatt (as page) 01, Ergänzung (Addition)

Bezeichnung (Type Designation) :	1) EF30080S2-EZ	1
	2) PF60601B1-QZ	1
	3) PSD1206PWB1-A (2)Z	1
	4) EF80251B2-QZ	1
	5) ME70151V1Z	1
	6) ME70151V2Z	1
	7) ME70151V3Z	1
	8) EC45101S3-QZ	1
	9) EF55101S2-C0Z	1
	10) PF80252B2-QZ	1
		1

Z steht für 15 Kennzeichen. Jedes Kennzeichen entspricht einem der folgenden Zeichen. (Z stands for 15 characters. Each character stands for one of the following signs): 0-9, A-Z, (,), ., /, - oder (or) freibleibend (blank)
Nur zum Zwecke der Vermarktung (for marketing purpose only).
Nennspannung/Nennstrom/Nennleistung : siehe Anlage
(Rated Voltage/Rated Current/Rated Power) (see appendix)

11

ANLAGE (Appendix): 1.39

Dem Zertifikat liegt unsere Prüf- und Zertifizierungsordnung zugrunde und es bestätigt die Konformität des Produktes mit den oben genannten Standards und Prüfgrundlagen. Zusätzliche Anforderungen in Ländern, in denen das Produkt in Verkehr gebracht werden soll, müssen zusätzlich betrachtet werden. Die Herstellung des zertifizierten Produktes wird überwacht.
This certificate is based on our Testing and Certification Regulation and states the conformity of the product with the standards and testing requirements as indicated above. Any additional requirements in countries where the product is going to be marketed have to be considered additionally. The manufacturing of the certified product is subject to surveillance.

Zertifizierungsstelle

TÜV Rheinland LGA Products GmbH
TÜVRheinland Zertifizierungsstelle

Albin Yang

TÜV Rheinland LGA Products GmbH - Tillystraße 2 - 90431 Nürnberg
Tel.: (+49/221)8 06 - 13 71 e-mail: cert-validity@de.tuv.com
Fax: (+49/221)8 06 - 39 35 http://www.tuv.com/safety

機密文件 禁止拷貝
Confidentiality Copy Forbidden