ITEM	PART NO.	PART NAME	RAW MTL COLOR	ARTWORK	MATERIAL	FINISH PROCESS	FINISH COLOR
	60.B0726.001	ASSY BASE BOARD LEFT HANDLE HB					

Item	Part No.	Description	Q'ty
1	33.B0703.001	BRKT_BASE_BOARD_HANDLE_L_HB	1
2	33.B0709.001	BRKT_BASE_BOARD_PIN_L_HB	1

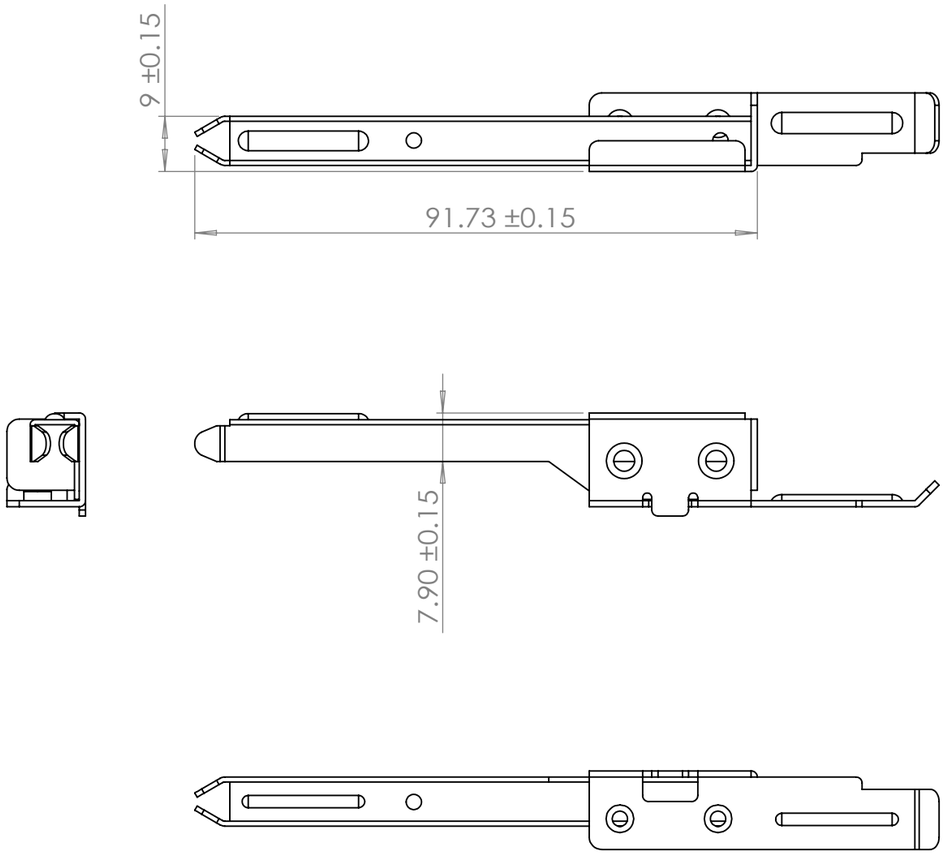

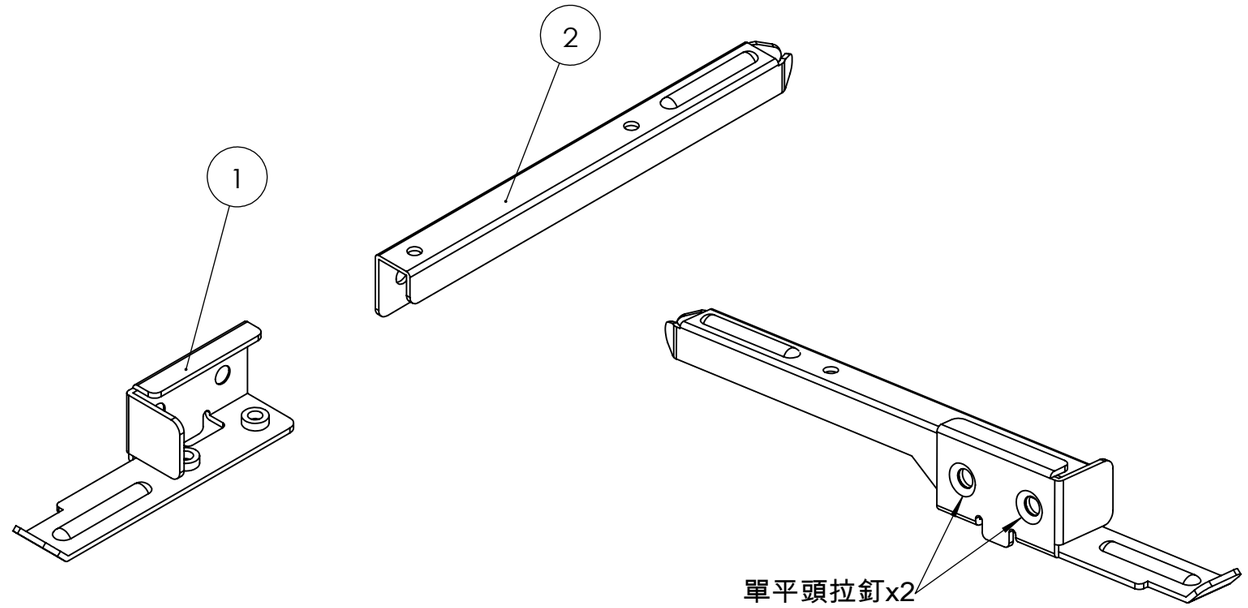

NOTE:
1.BENDING ANGLE UNDER 0.2mm RADIUS UNLESS OTHERWISE INDICATED.
2.FOR COSMETIC INSPECTION CRITERIA, PLEASE REFER TO EU4017.
3.'---'MARKS BURR NEED TO BE REMOVED.
4.FOR DEGREASING PROCESS,OZONE DESTROY SUBSTANCE(ODS)MUST NOT BE USED.
5.VENDOR CODE;PART NUMBER;ART WORK...ETC. AS BELOW TO MAKE:
  ** #* XX.XXXXX.XXX R01 (FOR REF.)
  **---------->VENDOR ABBREVIATION.
  #*---------->TOOLING SERIAL NUMBER.
  XX.XXXXX.XXX---->PART NUMBER.
  R01---------->REVISION NUMBER.(TOOLING MUST BE CHANGEABLE CODE TYPE)
6.TOLERANCE REFER TO THE TOL. TABLE UNLESS OTHERWISE STATED.
7.' * ' MARKS MUST MEASURE Cpk VALUE.
8.BURR DIRECTION MUST BE APPROVED BY WISTRON.
9.MATERIALS MUST MEET/EXCEED 'WISTRON'S SUPPLIER GREEN PROCUREMENT
  REQUIREMENT' (WISTRON DOC.NO.717-R025)
10.HEXAVALENT CHROMIUM (Cr 6+) AND ITS COMPOUNDS MUST NOT INCLUDED.
11.THE HOLES ARE RESERVED FOR _____ STANDOFF, PLS CHECK 60 ASSY DRAWING FOR SPEC.
12.SURFACE TREATMNET (APPEARANCE QUALITY AND COSMETIC SPEC.)
13.THE AREA OF CARRY POINT (CARRIER WEB)

Tapping
Inserts (pems, studs, etc.) noted and installation method determined
Joining methods (heat stake, sonic weld, tox, extrude and roll, etc.)

TOL ± / RANGE	M1	M2	S1	S2	P1	P2	C	URS
0~6	0.05	0.10	0.15	0.20	0.05	0.10	0.50	
6~30	0.10	0.20	0.15	0.25	0.10	0.15	1.00	
30~120	0.15	0.25	0.20	0.30	0.20	0.40	2.00	
120~300	0.15	0.30	0.25	0.45	0.40	0.80	3.00	
300~600	0.20	0.50	0.40	0.60	0.60	1.20	3.00	
600~1200	0.30	0.80	0.70	1.10	0.80	1.50	4.00	
ANG.TOL ±	1°							

MODEL	Honey Badger		NAME	ASSY BASE BOARD LEFT HANDLE HB
DRN	Mark Peng	11/24 2014	MATERIAL	
DSN	Mark Peng	11/24 2014	FINISH	
CKD	Mark Peng	11/24 2014	Wiwynn Corporation	
APPD	CH Hsieh	11/24 2014		

REV	DESCRIPTION	SIGN	DATE

DIM IN mm | DO NOT SCALE DWG | SHEET | OF

DRAWING NO. 60.B0726.001