NOTES:

1. INTERPRET DIMENSIONS AND TOLERANCES PER ASME Y14.5M-2009.
2. ALL DIMENSIONS ARE IN MM.
3. ALL COMPONENTS SHALL BE UL 94V-0 RECOGNIZED AND ROHS COMPLIANT.
4. CASE MATERIAL SHALL RESIST THE CREATION OF ZINC WHISKERS, SUCH AS ASTM A653 AND JISG3302 SGCC.
5. ALL DIMENSIONS ARE CONSIDERED CRITICAL TO FUNCTION DIMENSIONS AND SHALL BE INCLUDED IN PART QUALIFICATION.

6 LATCH TAB COLOR PANTONE 375C GREEN OR SIMILAR WITH FACEBOOK ENGINEERING WRITTEN APPROVAL. LATCH TAB MPN: PINGOOD MHL-14JP-A9H3 OR EQUIVALENT. LATCHES MUST HAVE A BACKSTOP TO PREVENT DAMAGE TO LATCH DURING ACTUATION.

7. ALL EDGES SHALL BE CONDITIONED FOR HANDLING WITH INDUSTRY STANDARD BURR NO LARGER THAN 10% OF MATERIAL THICKNESS AND SHALL CONFORM TO UL SAFETY SPECIFICATION 1349.
8. ALL COMPONENTS SHALL BE CLEAN AND FREE OF RUST AND FOREIGN MATERIAL SUCH AS DIRT, OIL, GREASE, OR OTHER CONTAMINANTS.

9 BBU HANDLE IS A 90° FOLDABLE HANDLE. THIS HANDLE IS FLARED INTO THE BBU FRONT SHEET METAL PANEL AND SHALL ONLY BE FOLDED 90° RIGHTWARD. THE HANDLE SHALL NOT PROTRUDE BBU RIGHT SURFACE WHEN FOLDED. MPN: FIVETECH 62-57P-064-0-07-5 OR EQUIVALENT.

REVISIONS				
ZONE	REV	DESCRIPTION	DATE	APPROVED
	01	INITIAL RELEASE	07/15/2021	D. SHAPIRO

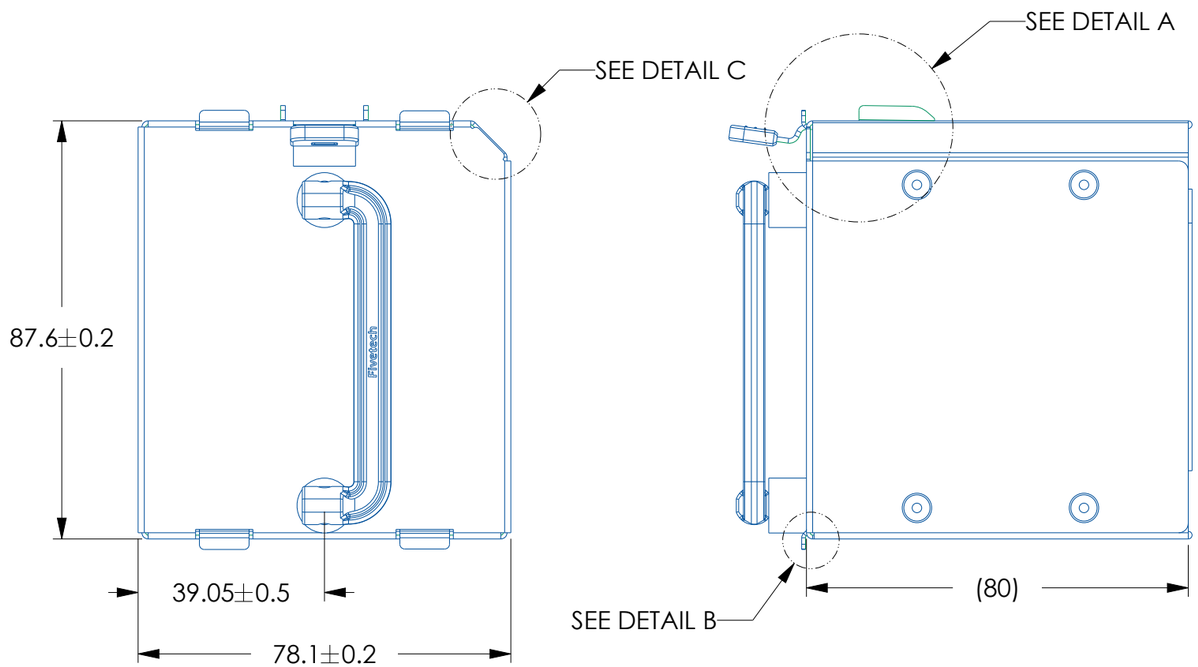

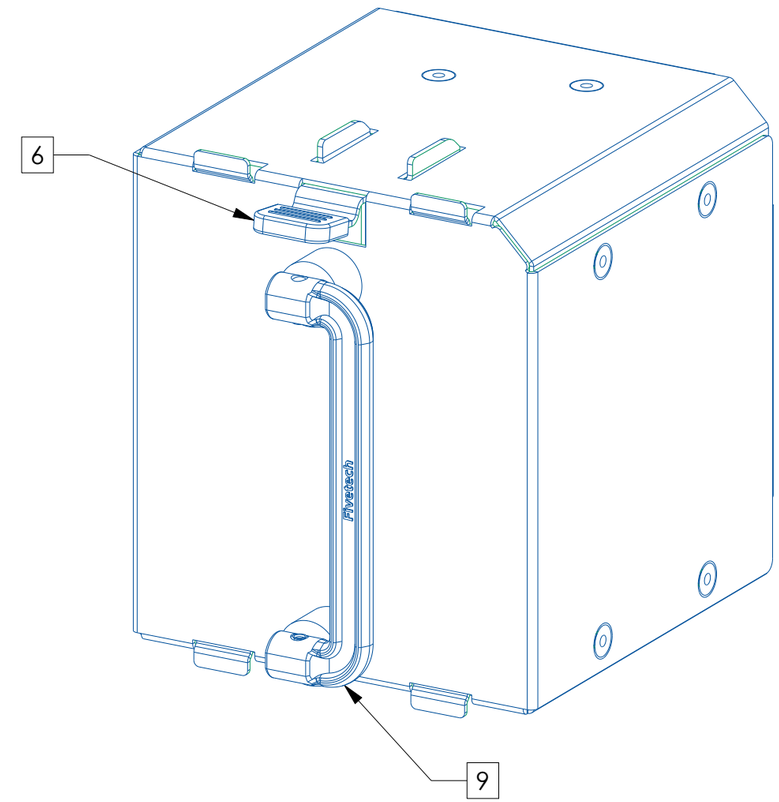

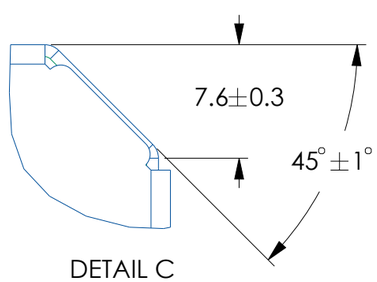

DETAIL C
SCALE 2.5

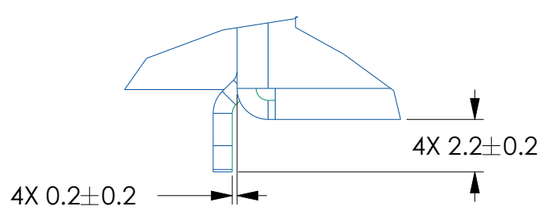

DETAIL B
SCALE 4

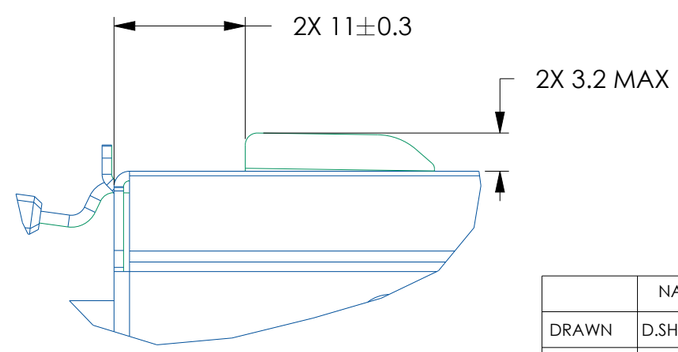

DETAIL A
SCALE 2

	NAME	DATE
DRAWN	D.SHAPIRO	07/15/2021
CHECKED	D.SHAPIRO	07/15/2021
ENGINEER	D.SHAPIRO	07/15/2021

PROPRIETARY AND CONFIDENTIAL

THE INFORMATION CONTAINED IN THIS DRAWING IS THE SOLE PROPERTY OF FACEBOOK. ANY REPRODUCTION IN PART OR AS A WHOILE WITHOUT PERMISSION OF FACEBOOK IS PROHIBITED.

facebook

TITLE:

BATTERY BACKUP SLOT BLANK

TBD

REV 01

THIRD PROJECTION

1 OF 1