NOTES:

1. INTERPRET DIMENSIONS AND TOLERANCES PER ASME Y14.5M-2009.
2. ALL DIMENSIONS ARE IN MM.
3. ALL COMPONENTS SHALL BE UL 94V-0 RECOGNIZED AND ROHS COMPLIANT.
4. CASE MATERIAL SHALL RESIST THE CREATION OF ZINC WHISKERS, SUCH AS ASTM A653 AND JISG3302 SGCC.
5. ALL DIMENSIONS ARE CONSIDERED CRITICAL TO FUNCTION DIMENSIONS AND SHALL BE INCLUDED IN PART QUALIFICATION.

6 LEDS SHALL FOLLOW FACEBOOK INDICATOR SPEC. LEDS TO BE LABELED IN A PERMANENT AND LEGIBLE MANNER LOCATED APPROXIMATELY WHERE SHOWN. TEXT 2.5 MM TALL MINIMUM.

7 LATCH TAB COLOR PANTONE 375C GREEN OR SIMILAR WITH FACEBOOK ENGINEERING WRITTEN APPROVAL. LATCH TAB MPN: PINGOOD MHL-14JP-A9H3 OR EQUIVALENT. LATCHES MUST HAVE A BACKSTOP TO PREVENT DAMAGE TO LATCH DURING ACTUATION.

8 AIRFLOW PER INDICATED DIRECTION

9. ALL EDGES SHALL BE CONDITIONED FOR HANDLING WITH INDUSTRY STANDARD BURR NO LARGER THAN 10% OF MATERIAL THICKNESS AND SHALL CONFORM TO UL SAFETY SPECIFICATION 1349.
10. ALL COMPONENTS SHALL BE CLEAN AND FREE OF RUST AND FOREIGN MATERIAL SUCH AS DIRT, OIL, GREASE, OR OTHER CONTAMINANTS.

11 BBU HANDLE IS A 90° FOLDABLE HANDLE. THIS HANDLE IS FLARED INTO THE BBU FRONT SHEET METAL PANEL AND SHALL ONLY BE FOLDED 90° RIGHTWARD. THE HANDLE SHALL NOT PROTRUDE BBU RIGHT SURFACE WHEN FOLDED. MPN: FIVETECH 62-57P-064-0-07-5 OR EQUIVALENT.

12 ONE FAN TO BE INSTALLED ON THE FRONT PORTION OF THE BBU. OTHER FAN POSITIONS WITHIN BBU ARE ACCEPTABLE WITH FACEBOOK ENGIENERING WRITTEN APPROVAL. THE FAN SIZE SHALL NOT EXCEED 60MM WIDTH X 60MM HEIGHT X 38MM THICKNESS. PERFORATION FOR THE FAN SHALL BE MADE ON THE BBU FRONT PANEL.

13 ENCLOSURE OPENINGS SHALL NOT NEGATIVELY AFFECT THE SAFETY WHEN FIRE IS IGNITED BY ANY FAULT CONDITION INSIDE THE ENCLOSURE. ENCLOSURE SHALL BE DESIGNED TO SUPRESS FLAMES FROM ESCAPING FROM THE FRONT OR REAR. REFERENCE UL9540A FOR TESTING CONDITIONS.

14 BBU HEALTH CHECK BUTTON TO BE PLACED IN APPROXIMATE LOCATION. BUTTON TO BE RECESSED SO THE TOP DOES NOT PROTRUDE PAST THE FRONT PANEL OF BBU IN NATURAL STATE. RECESS SHALL HAVE ENOUGH SPACE FOR PROPER FINGER ENGAGEMENT.

15 EMI GASKET TO BE USED FOR BBU TO SHELF GROUNDING, UNLESS EMI TESTING RESULTS DEEM IT NECESSARY FOR EMI CONTAINMENT. LOCATION SHOWN IS APPROXIMATE AND CAN VARY. GASKET TO ALWAYS MAKE CONTACT WITH SHELF SHEET METAL.

REVISIONS

ZONE	REV	DESCRIPTION	DATE	APPROVED
	1	INITIAL RELEASE	11/18/2020	CX
	2	ADJUST LATCH MAX PROTRUSION	12/10/2020	CX
	3	UPDATE LATCH TAB, TORX SCREWS, REAR FLANGES,	01/27/2021	D. SHAPIRO
	4	UPDATED CONNECTOR TABS, EMI GASKET, HEALTH BUTTON	07/14/2021	D. SHAPIRO

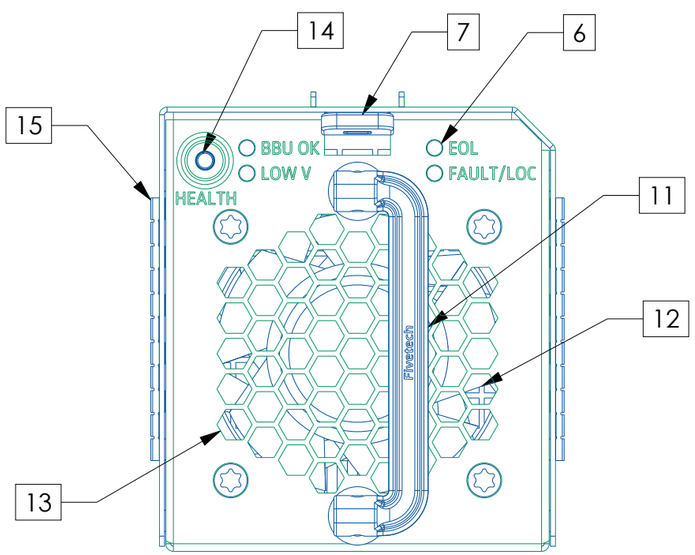

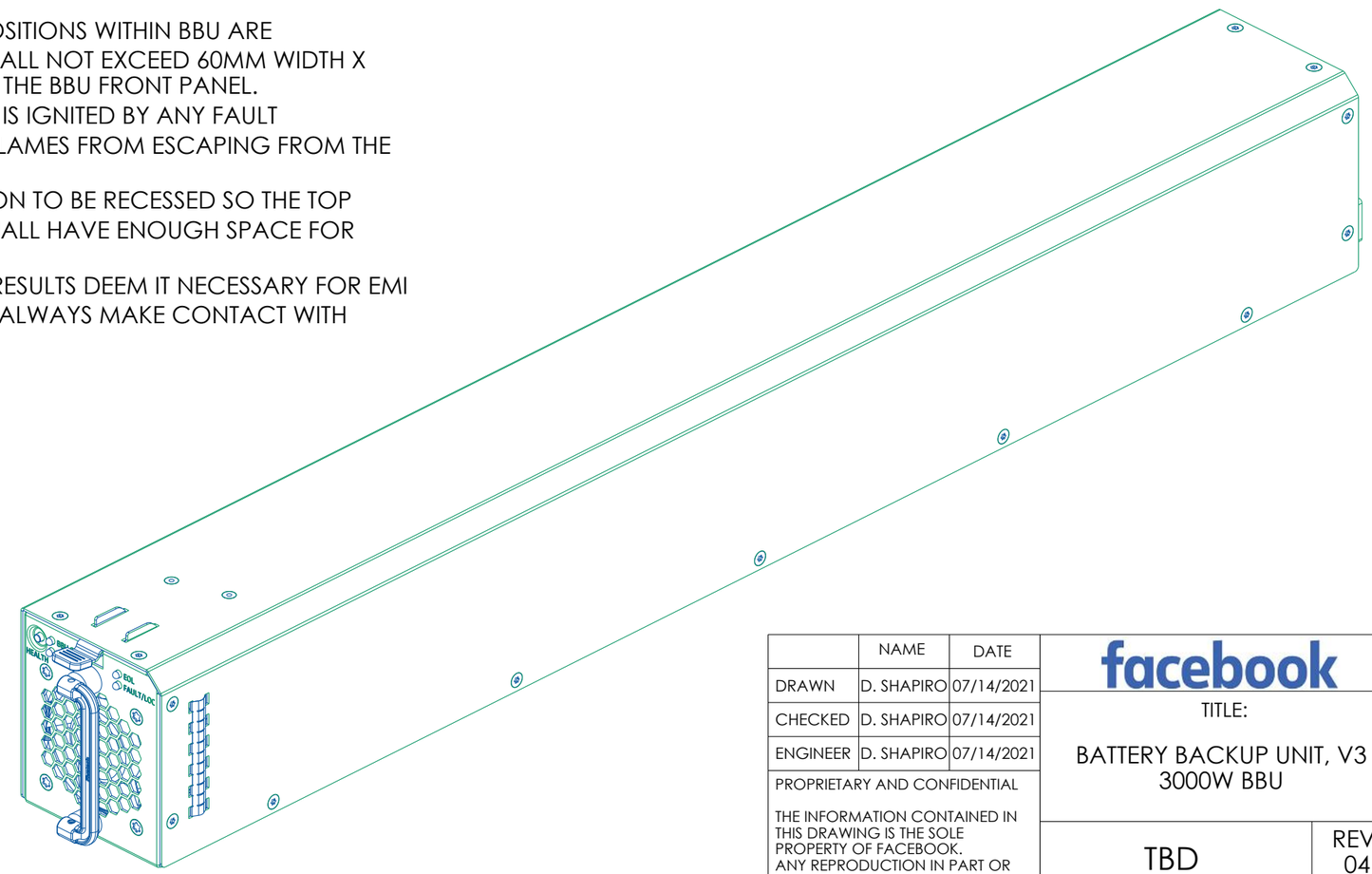

	NAME	DATE
DRAWN	D. SHAPIRO	07/14/2021
CHECKED	D. SHAPIRO	07/14/2021
ENGINEER	D. SHAPIRO	07/14/2021

PROPRIETARY AND CONFIDENTIAL

THE INFORMATION CONTAINED IN THIS DRAWING IS THE SOLE PROPERTY OF FACEBOOK. ANY REPRODUCTION IN PART OR AS A WHOILE WITHOUT PERMISSION OF FACEBOOK IS PROHIBITED.

facebook

TITLE:

BATTERY BACKUP UNIT, V3
3000W BBU

TBD

REV 04

THIRD PROJECTION

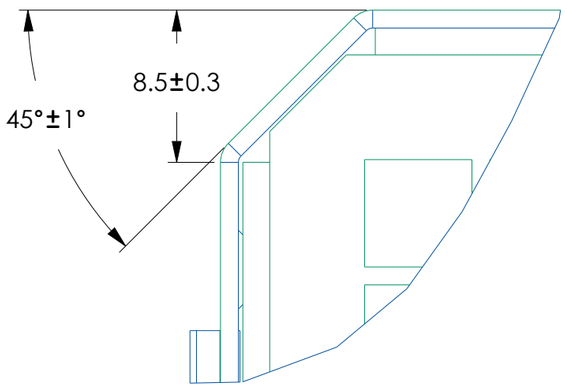

DETAIL A
SCALE 3

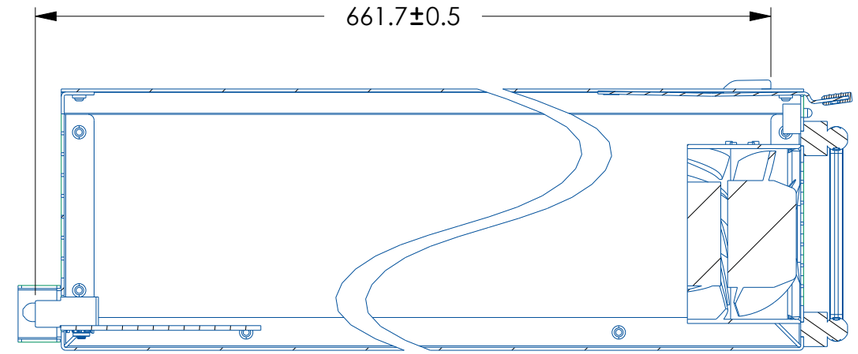

SECTION A-A
SCALE 0.5

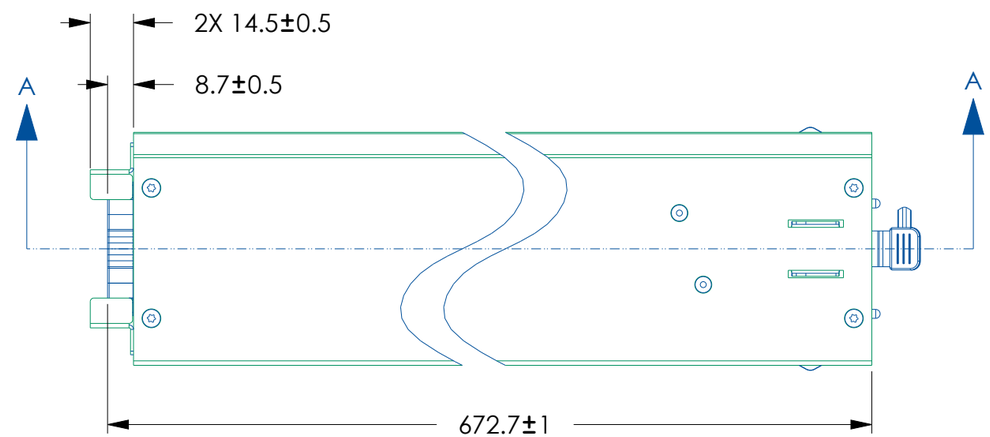

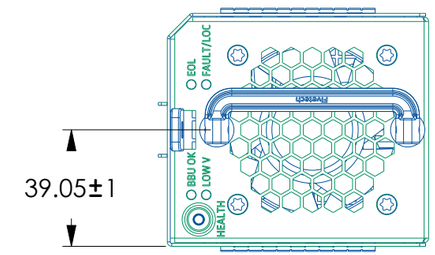

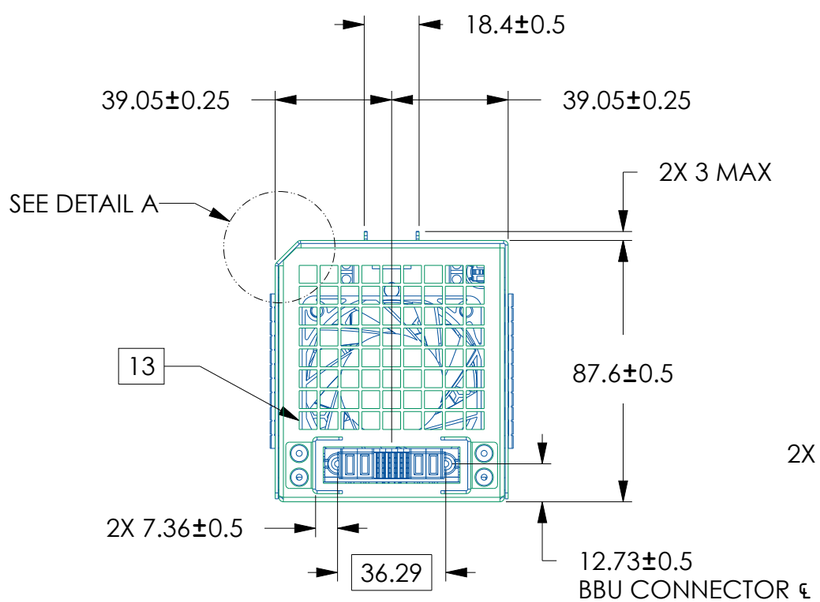

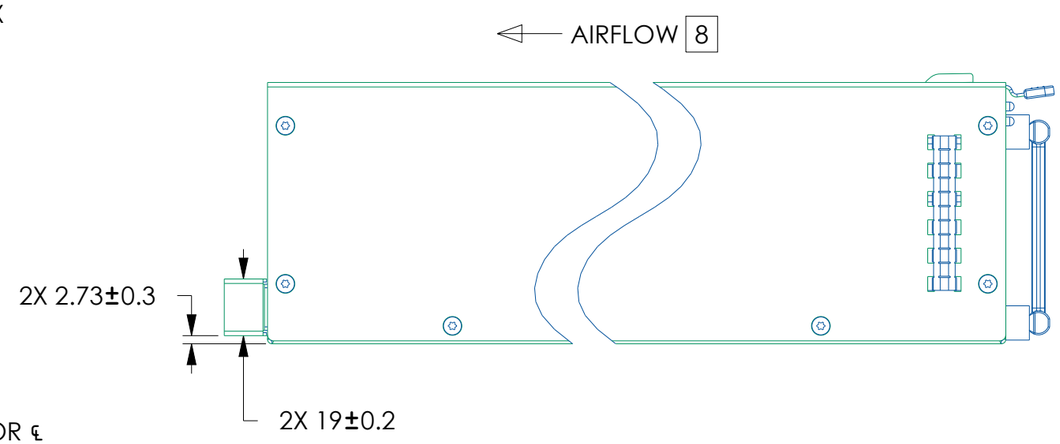

TBD	2 OF 2